PROGRAMME DECISION E-GVAP

PHASE 2019 - 2023

DOCUMENT HISTORY VERSION CONTROL TABLE				
Version	Date	Comment	Version authorised for release to	Authorised by
2019-2023 V1.0 (Final)	06/12/2018	Final version approved and adopted by the 21st Assembly of Members.	Version authorised for release to all Members, potential Cooperating Members and to the EUMETNET Portal.	E. Petermann

Programme Decision for the EUMETNET Optional Programme E-GVAP

Version 1.0

Preamble

The EUMETNET Economic Interest Grouping (the **Grouping** or the **EIG**) has been incorporated to, inter alia, establish Programmes as required by the EIG Assembly of Members.

The EIG Assembly of Members has decided to continue the programme E-GVAP as an Optional Programme under EUMETNET and its Decision is recorded in this Programme Decision which shall be attached to the relevant Minutes of the EIG Assembly of Members.

Decision

At the 21st Assembly meeting on 21st-23rd November 2018, the EIG Assembly of Members decided to continue the optional E-GVAP Programme ("Operational Service" in the current phase) for another 5 years.

The Programme is defined by the following documents:

- The decisions of the EUMETNET Assembly of Members related to the Programme;
- This Programme Decision Document;
- The E-GVAP revised proposal submitted by the Danish Meteorological Institute (DMI) in consortium with the Royal Netherlands Meteorological Institute (KNMI) and the United Kingdom Met Office which is attached as Annex 2 of this Programme Decision.

This Programme Decision supersedes all previous Programme Decisions relating to this Programme, it is consistent with the Agreement for the Establishment of the EUMETNET EIG, dated 17th Sep 2009 (the **EIG Agreement**) and its amendments and incorporates the changes made by the EIG Assembly of Members to the governance of the EIG and the delivery of its Programmes until the date of its publication.

This Programme Decision specifies the objectives, deliverables, resource requirements, financial terms and major milestones of the Programme. The purpose of this Programme Decision is to establish the terms and conditions by which the objectives and tasks of the Programme will be delivered.

1. Programme Participants

The Programme Participants are the funders of the programme. They are (i) the EIG Participating Members and (ii) 3rd party participants of the Programme approved by the EIG Assembly of Members.

3rd party participants may be National Meteorological (and Hydrological) Services (**NM(H)Ss**) which are not members of the EIG, the European Union (**EU**) or European Commission (**EC**), national, international or intergovernmental organizations, academic institutions or private sector companies. In each case, a 3rd party participant can only join the Programme in accordance with Article 13 of the EIG Agreement. 3rd party participants will be required to sign a Cooperation Agreement.

The Programme Participants at the time the Programme Decision was made are listed in **Annex 1** (as may be updated from time to time). Changes to **Annex 1** do not constitute a change to the Programme Decision but will be agreed during a meeting of the EIG Assembly of Members and included in the minutes thereof.

2. Duration

The new phase of E-GVAP as an optional programme will officially start on 1st January 2019, the Programme will continue until 31st December 2023.

3. Programme objectives

The Global Navigation Satellite System (GNSS) zenith total delay (ZTD) provide Near Real Time (NRT) humidity information to NWP and nowcasting systems based on ground based GNSS observations. Therefore, the main purpose of E-GVAP is to provide its EUMETNET members with GNSS ZTD estimates and integrated water vapour (IWV) data for operational meteorology.

The observing equipment is largely owned by geodetic institutions and installed with the purpose of precise positioning. This reduces drastically the price of the observing system to meteorology but limits control, and requires a very close collaboration between meteorology and geodesy.

In the fourth phase the current E-GVAP observing network shall continue. Furthermore, the current attempts to expand into areas where coverage is currently poor, increase the homogeneity of data, validation and active quality control, and on reducing latency, moving to sub-hourly data processing and distribution shall continue.

E-GVAP shall continue to help members access global data. Research in next generation GNSS products for meteorology and use of them should be monitored, and supported when feasible within E-GVAP resources. As a result of recent progress in slant total delay (STD) estimation and current developments regarding assimilation of slants in high resolution NWP, E-GVAP shall in phase 4 enable operational distribution and monitoring of GNSS STDs, on top of the current work on ZTD.

4. Programme requirements and milestones

The requirements and milestones as well as the methods to reach them are described in the DMI proposal for E-GVAP annexed to this programme decision (Annex 2) and revised with answers to questions and clarifications corresponding to comments made by the Observation Assessment Team.

5. Deliverables

The main deliverable in E-GVAP is the processing and distribution of NRT ZTD data, which are estimated by processing data from high precision ground-based GNSS receivers. This includes:

- Validation and active quality control, and on reducing latency, moving to sub-hourly data processing
- During 2019 - 2023, E-GVAP will set up the operational distribution and monitoring of Slant Total Delay (STD) Data.

A second deliverable is the support to EUMETNET Members in the processing of GNSS data, the estimation of atmospheric properties of importance to meteorology, and help to advance the usage of such data in NWP and now-casting.

Other deliverables are:

- Monitoring and support, when feasible within E-GVAP resources, of research in next generation GNSS products for meteorology and use of them.
- Maintaining, extending and improving the collaboration with the geodetic community;

Details on these and other associated deliverables are provided in the revised proposal.

6. Appointment of Coordinating Member and partners

By agreeing this Programme Decision, the EIG Assembly of Members delegates responsibility to DMI as the **Coordinating Member** for E-GVAP in accordance with Articles 3.7, 3.8 and 7.6a of the EIG Agreement. DMI will deliver the programme in collaboration with KNMI (The Netherlands) and the Met Office (United Kingdom) according to the distribution of work described in the DMI Proposal and in particular in the method statements.

DMI will ensure the delivery of the objectives, deliverables and milestones of the Programme and will execute the task of managing the Programme within the limit of the resources as specified in the approved 5 Year Plan and in particular the annual budget, in a timely and proper manner with all due care and attention and in accordance with the EIG Agreement, Working Arrangements and Financial Rules.

DMI is accountable to the EIG Assembly of Members for the delivery of the Programme and its Programme Manager (see section 7) reports on a routine basis to the Science and Technology Advisory Committee (**STAC**). It is the responsibility of the Programme Manager in consultation with the STAC to identify decisions that have to be referred to the Policy and Finance Advisory Committee (**PFAC**) or to the EIG Assembly of Members. It shall in particular be the case for decisions involving general policy and funding. Consultation with the EIG Secretariat may help confirm whether an issue requires the attention of the STAC, PFAC or the EIG Assembly of Members and also to schedule the issue(s) into the relevant meeting agenda.

7. Management

7.1 Programme Manager

DMI will appoint a Programme Manager (the **Manager**) and a Programme Management Team (the **Management Team**). The Coordinating Member's Manager and Management Team remain employed or contracted by the Coordinating Member.

As a general rule, the E-GVAP Programme will be represented at STAC by the Observations Capability Area Programme Manager. However, if specific issues require the presence of the Programme Manager, he/she will attend the STAC meeting.

The Manager will be given the necessary authorities by the Coordinating Member to commit expenditure and resources on behalf of the EIG in accordance within the financial limits indicated in this Programme Decision (Section 10) and the budget approved annually by Participating Members. The Coordinating Member and its Management Team will abide by the financial rules of the EIG and the Coordinating Member's own financial and management rules.

In the event that the Coordinating Member's Manager is unable to carry out his/her duties for a period of one (1) month or more, the Coordinating Member will take appropriate interim measures to ensure that the necessary management tasks are carried out efficiently and to schedule and advise the EIG Secretariat of the situation. Should the situation be expected to continue for more than three (3) months, the EIG Secretariat will inform the EIG Assembly of Members who may request that the Coordinating Member appoints a new Manager or make a decision concerning corrective or preventive action according to Article 6.2I of the EIG Agreement.

In the event that one or more Programme Participants fail to make their financial contributions for the Programme, the Coordinating Member will not be expected to commit financial resources beyond those received (unless requested by the EIG Assembly of Members and agreed by the Coordinating Member). If the Programme Manager identifies a cash flow situation that may adversely affect the delivery of the Programme objectives, the Coordinating Member may alert the Executive Director, at which point the ED may take the necessary action, in accordance with the EIG Financial Rules, to assist in the delivery of the Programme.

7.2 Dependency on KNMI and Met Office for delivery of some part(s) of the Programme

DMI has formed a consortium with KNMI and the Met Office to deliver the Programme. Therefore, DMI shall ensure that an agreement is in place with these partners. Such agreements can be developed as an Annex to this Programme Decision, or as a separate MoU. In either case, DMI is required to set out clearly the responsibilities of KNMI and the Met Office and any other terms that they require, subject to being consistent with this Programme Decision.

DMI is asked to ensure such agreements are in place by the end of March 2019 at the latest.

7.3 Sub-Contracting to 3rd Parties

DMI is permitted to enter into agreements with 3rd parties to assist in delivering the Programme. However, if entering into such an agreement may give rise to liabilities for the EIG and/or its Members, then approval from the EIG Assembly of Members should be sought before entering into any such agreement. As a general principle, the EIG does not accept any liabilities to 3rd parties that have not been agreed in advance.

Furthermore, DMI should ensure that all agreements with 3rd parties that have a direct impact on the delivery of the Programme are written in such a way that they may be made visible to any Member who wishes to view the agreement.

7.4 Liabilities as regards employees and contractors

DMI will:

- Assume full responsibility for all matters concerning the employment of staff and its contractors required for delivery of this Programme Decision;
- Ensure, to the extent legally possible, that, at termination, the benefit and burden of the contracts of employment of all staff involved in the Programme do not transfer, should a different Member be appointed as successor Coordinating Member;
- To the extent legally possible hold any successor Coordinating Member indemnified against any liabilities in connection with the Staff.

7.5 Liability

In the running of the Programme, DMI will take all appropriate measures to ensure, to the extent legally possible, that no liability is incurred by the EIG Members as a consequence of its actions and those of KNMI, Met Office and their Staff or Contractors. DMI will not be responsible for claims arising from the actions of the EIG Assembly of Members or individual EIG Members other than those of KNMI and the Met Office in their activities as related to this programme.

7.6 Transfer of assets

If the EIG Assembly of Members decide to continue this Programme beyond the period defined in this Programme Decision, and if the Coordinating Member is due to change, DMI will ensure the availability of the Programme team to allow the transfer of assets and competence to the successor. A proposal for the organisation of this transition phase should be made available at least nine (9) months before the handover.

7.7 Memoranda of Cooperation

DMI may make a request (by notifying the EIG Secretariat) to the EIG Assembly of Members for a Memorandum of Cooperation to be established between the EIG and a non-participating 3rd party for exchange of knowledge and information and general collaboration provided that such an arrangement is deemed consistent with the Programme's aims and compliant with Article 13 of the EIG Agreement, *i.e.,* that it will bring benefit to all EIG Members. Usually such a request will be scrutinised by the PFAC prior to consideration by the EIG Assembly of Members.

8. Commitments of the participating Members

The Participating Members commit to carrying out their responsibilities in assisting DMI in the delivery of the Programme.

The Participating Members will make their financial contributions for this programme as part of their total yearly financial commitment to the EIG in accordance with Article 9 of the EIG Agreement. The Coordinating Member, as a Participating Member, bears its share of the agreed contribution (as defined in section 10 of this Programme Decision) under the same rules as the other Participating Members.

9. Commitments of the participating 3rd parties

The commitments of the 3rd party participants are documented in separate Cooperation Agreements between the EIG and the 3rd part(y)(ies).

10. Programme Financial Plan

The Assembly of Members has agreed a financial ceiling of expenditure for the Programme as described in the following tables which include an indicative distribution for each of the years 2019 - 2023:

Item-wise, including in-kind contributions, it is divided as:

All costs are annual totals in €	2019	2020	2021	2022	2023	TOTAL
Programme/Operational Management Costs	52 790	52 790	52 790	52 790	52 790	263 950
Other staff costs	32 230	32 230	32 230	32 230	32 230	161 150
Travel costs	25 000	25 000	25 000	25 000	25 000	125 000
Equipment costs	0	0	0	0	0	0
Infrastructure costs	3 340	3 340	3 340	3 340	3 340	16 700
License costs	0	0	0	0	0	0
Supplier costs	0	0	0	0	0	0
Organisational overheads	57 555	57 555	57 555	57 555	57 555	287 775
Sub-Total	170 915	170 915	170 915	170 915	170 915	854 575

In-kind contributions						
Financial	-41 915	-41 915	-41 915	-41 915	-41 915	-209 575
Other (e.g. equipment, IPR)						
TOTAL	-41 915	-41 915	-41 915	-41 915	-41 915	-209 575
Funded costs ceilings	129 000	129 000	129 000	129 000	129 000	645 000

Host-wise costs ceiling, not including in-kind contributions, is divided as:

All costs are annual totals in €	2019	2020	2021	2022	2023	TOTAL
DMI	47 400	47 400	47 400	47 400	47 400	237 000
UK Met Office	28 300	28 300	28 300	28 300	28 300	141 500
KNMI	28 300	28 300	28 300	28 300	28 300	141 500
Travel costs	25 000	25 000	25 000	25 000	25 000	125 000
Total	129 000	129 000	129 000	129 000	129 000	645 000

The financial contributions of members should not exceed the funded costs ceilings shown in the second table which may only be amended by the Assembly of Members.

The Programme Manager is responsible for working with the Secretariat to ensure that a Budget proposal for the Programme is made to the EIG Assembly of Members for each year and in line with the EIG's budget and business planning cycle in the Financial Rules. The budget proposal will be scrutinized by the PFAC prior to submission to the EIG Assembly of Members at its autumn meeting and will be agreed every year according to the EIG Financial Rules. Later changes to the budget require a formal budget change request (if they are beyond the thresholds of the PM's delegation) to be scrutinized by PFAC before submission to the Assembly.

This EIG budget will include for the Programme all expected revenue and planned expenditure for that year. Expenditure will be covered by the contributions of the Programme Participants and by any other income of the Programme, including 3rd party contributions, in-kind contributions and the agreed use of surplus from the previous year.

The Contributions will be calculated according to Article 9.2 of the EIG Agreement. The EIG Secretariat gathers the contributions from the EIG Members and 3rd Party participants and transfers the necessary funds to the Coordinating Member according to the EIG Financial Rules. If agreed by Coordinating Members and the Secretariat, the share of these funds corresponding to partners of the Coordinating Member may be transferred directly from the Secretariat to the partners. Implementation details if needed will be annexed to this Programme Decision.

For expenditure commitments likely to span more than one (1) financial year, commitments can only be made in line with the EIG Financial Rules and reported as such.

At the same time as agreeing the following year's budget, the EIG Assembly of Members will define the following year's financial delegations including those for the Programme Managers. These delegations and the associated Programme Budget will be communicated to the Programme Manager by the Executive Director following the EIG Assembly of Members' meeting and before the end of December each year.

11. New participants

New participants may join the Programme in accordance with Articles 3.6 and 13 of the EIG Agreement.

12. Disputes

Any disputes will be handled according to Article 16 of the EIG Agreement.

13. Intellectual Property Rights, Assets, and ownership of EUMETNET programmes

The EIG rules concerning acquired and pre-existing knowledge of Participating Members of Programmes and concerning tangible assets are described in Article 12 of the EIG Agreement and amplified in this Programme Decision below. For 3rd party participants, the IPR issues will be covered in the relevant terms of the respective cooperation agreements which will be compatible with the terms of the EIG Agreement.

The PFAC will be responsible for considering the terms and conditions under which Programme IPR and assets may be used (if not covered by Article 12 of the EIG Agreement) and making such recommendations to Participants and to the EIG Assembly of Members for approval. The Coordinating Member of each programme will remain responsible for the day to day management of, and exploitation of, the IPR and assets throughout the Programme.

It is the responsibility of the Participating Members to ensure (in accordance with Article 12.2b of the EIG Agreement) that should the Programme produce intellectual property that may be capable of industrial or commercial applications (by Members) outside the scope of Article 2 of the EIG Agreement, the terms for

exploitation by Members should be appropriately documented and annexed to this Programme Decision. Participating Members should propose such amendments to the EIG Assembly of Members for approval. If Data Policy rules are to be defined concerning the availability and use of the said intellectual property by third parties such rules should be documented and annexed to this Programme Decision.

Physical assets procured or developed by the Programme will remain the responsibility of the Coordinating Member until such time as the Programme transfers to a new Coordinating Member or the Programme ceases.

In the event of a transfer to a new Coordinating Member the current Coordinating Member will negotiate and agree the transfer of responsibility with the new Coordinating Member (see also section 7.6 above).

When the Programme is due to cease, the Coordinating Member will agree with the EIG Secretariat appropriate disposal of such assets.

14. Confidentiality

Each of the Programme Participants undertake to the others that while this Programme Decision is in force, and at any time thereafter, confidential information shall be kept secret and confidential and not disclosed (save as may be necessary for the purpose of this Programme Decision) to any third party. For the avoidance of doubt, confidential information shall include intellectual property, business information and information relating to this Programme Decision.

Those Programme Participants subject to the legal principle of public access to official records and files may in a court decision be ordered to issue information and/or documentation. Such a disclosure will not be construed as contrary to this agreement.

15. Withdrawal, Departure and exclusion of Programme Participants

In the event that a Participating Member wishes to withdraw from the Programme the Participating Member shall make its intentions known to all other Participating Members at the next meeting of the EIG Assembly of Members, including their reasons for leaving. In accordance with Article 7.8.c of the EIG Agreement, during the EIG Assembly of Members' meeting, the Participating Members of the relevant Programme(s) will make a vote on the request made. If the request is approved the Participating Members will decide on the terms for withdrawal from the Programme.

Should a Participating Member depart from the EIG or be excluded from it, then the Articles 7.4.i, 14 and 15 of the EIG Agreement shall apply. For 3rd party participants, this matter will be covered in the relevant contractual terms which will be compatible with the terms of the EIG Agreement.

16. Audit and disclosure

At any time, the EIG Assembly of Members or any individual EIG Member may review the Programme accounts and may also request an external audit to be performed at its own expense.

17. Modifications to the Programme Decision

The EIG Assembly of Members can modify the existing Programme Decision according to Articles 6.2k and 7 of the EIG Agreement. Normally such changes will be a matter for the Participating Members only.

18. Termination of the Programme Decision

This Programme Decision will cease to be effective at the end of the period defined in Section 2 above. The EIG Assembly of Members may decide on the earlier termination of the Programme according to Articles 7.8 and 19.3 of the EIG Agreement. The EIG Assembly of Members can also decide to extend the duration of this Programme Decision (normally not more than one year) after having ensured that Participating Members will continue to fund the Programme.

In the event of significant programme delays, failure to deliver, or cost escalation, these matters will be raised to the EIG Assembly of Members where the Participating Members will agree on changes to the Programme Decision but only during a meeting of the EIG Assembly of Members (in accordance with the EIG Agreement). They may choose to modify the Programme Decision or terminate the Programme.

The Coordinating Member may seek to return its delegation of responsibility for the Programme by making a written request to the EIG Assembly of Members with a minimum notice period of six (6) months prior to its intended withdrawal date.

19. Precedence and reference

For all matters not specifically covered by the present Programme Decision, the rules of the EIG Agreement, Working Arrangements and Financial Rules shall apply.

ANNEX 1 to the E-GVAP PROGRAMME DECISION

Provisional E-GVAP Programme Participants (from 1st January 2019)

	EIG Participating Members
1.	ZAMG, AUSTRIA
2.	RMI, BELGIUM
3.	DHMZ, CROATIA
4.	CYMET, CYPRUS
5.	DMI, DENMARK
6.	FMI, FINLAND
7.	Météo-France, FRANCE
8.	DWD, GERMANY
9.	OMSZ, HUNGARY
10.	IMO, ICELAND
11.	Met Éireann, IRELAND
12.	LEGMC, LATVIA
13.	MeteoLux, LUXEMBURG
14.	KNMI, NETHERLANDS
15.	MET Norway, NORWAY
16.	IPMA, PORTUGAL
17.	RHMSS, SERBIA
18.	SHMU, SLOVAK Republic
19.	ARSO, SLOVENIA
20.	AEMET, SPAIN
21.	SMHI, SWEDEN
22.	MeteoSwiss, SWITZERLAND
23.	Met Office, UK

	Third parties (if any)

EUMETNET
EUROPEAN METEOROLOGICAL SERVICES NETWORK

ANNEX 2 to the E-GVAP PROGRAMME DECISION

E-GVAP FINAL Programme Proposal submitted by the DMI in partnership with KNMI and The Met Office on 19th March 2018

1. **EIG EUMETNET GNSS Water Vapour Programme phase 4 (E-GVAP-4)**
2. **Members: DMI, KNMI and UK Met Office. Coordinating Member: DMI**
3. **Executive Summary of Proposal**

The main purpose of E-GVAP is to provide its EUMETNET members with GNSS zenith total delay (ZTD) estimates and integrated water vapour (IWV) in near real-time (NRT) for operational meteorology.

A second purpose is to help advance processing of GNSS data for estimation of atmospheric properties of importance to meteorology, and help advance usage of such data in NWP and now-casting.

The GNSS ZTD estimates provide NRT humidity information to NWP and now-casting systems based on ground based GNSS observations. The observing equipment is largely owned by geodetic institutions and installed with the purpose of precise positioning. This drastically reduces the price of the observing system to meteorology, but limits control, and requires a very close collaboration between meteorology and geodesy.

In the next phase of the EUMETNET Programme the E-GVAP observing network shall continue. The work in the current phase to expand into areas where coverage is currently poor, increase the homogeneity of data, validation and active quality control, and on reducing latency, moving to sub-hourly data processing and distribution shall continue. E-GVAP shall continue to help members access global data. Research in next generation GNSS products for meteorology and use of them will be monitored, and supported when feasible within E-GVAP resources.

As a result of recent progress in slant total delay (STD) estimation and current developments regarding assimilation of slants in high resolution NWP, E-GVAP will in phase 4 enable operational distribution and monitoring of GNSS STDs, on top of the current work on ZTD.

4. **Main Proposal**

Include an overview of approach

This bid is made in response to the “EUMETNET Invitation for Submission of Proposals, Programme Phase 2019-2023, Observations Capability Area (OBS CA), PART 2, Chapter 10, E-GVAP requirements (after A19 Approval). That document is hereafter referred to as “the approved E-GVAP requirements”.

The bidding team is the same as the current team that has successfully delivered E-GVAP through phase I-III. The overall structure and the personal will be the same, ensuring the project benefits from experience and lessons learnt as well as the benefits of continuity.

The members behind this bid is similar to the team running E-GVAP I to III. It is expected the team of people currently working on E-GVAP will continue in the next phase, meaning that the continuation aspect of next phase E-GVAP, which is the major part, is very simple, as the current setup will continue.

In addition a number of enhancements will be made, mainly in order to improve timeliness by more sub-hourly data processing and sub-hourly data uploads and distribution, and to start provision of STDs.

Figure 1 shows the overall E-GVAP data flow, with the analysis centers (ACs) on the left, the data exchange and monitoring facilities to the right. Figure 2 shows a list of the ACs. Notice that some of the ACs delivers several different ZTD products, such as hourly, sub-hourly and/or global. They are separated by naming them differently, an example being that the AC METO (Met Office) provides the 3 ZTD products METR (sub-hourly), METG (global) and METO (standard hourly).

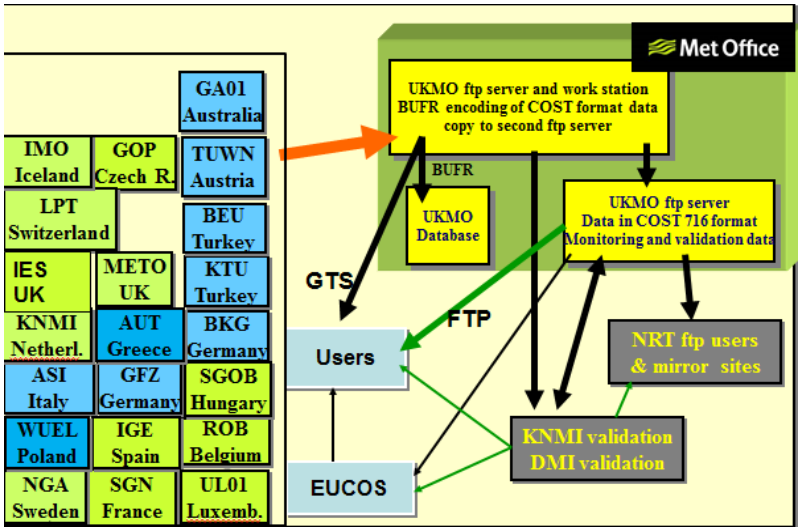

Figure 1 The E-GVAP general setup

AC	Institution
AUT	Aristotle Univ. of Thessaloniki Analysis Center, Greee.
ASI	e-geos/Telespazio, Italy
BEU	Zonguldak University of Technology, Turkey
BKG	Federal Agency for Cartography and geodesy, Germany
GA01	Geoscience Australia New
GFZ	Helmholz Centre Potsdam, GFZ German Res. Cen. f Geosciences
GOPE	Geodectic Observatory Pecny, Czech Republic
IES	Inst. of Eng., Surv. And Space Geodesy, Univ of Nottingham, UK
IGE	Instituto Geografica National, Spain
IMO	Icelandic Met Office
KNMI	Royal Meteorological Institute of the Netherlands
KTU	Karadeniz Technival Univ. Analsis Center, Turkey
LPT	SwissTopo, Switzerland
METO	UK Met Office
NGA1	Lantmateriet (Swedish Mapping, Cadestre and Land Reg. Authority), Gavle, Sweden
ROB	Royal Observatory of Belgium
SGN	Institut Geographique National, France
SGOB	Satellite Geod. Obs, IGCRS + Technical Univ. Budapest, Hungary
TUWN	Technical University Vienna, Austria
UL01	University of Luxembourg, Fac. Of Science and Communication
WUEL	Wroclaw University + Inst. Of Geodesy and Geoinformatics, Poland

Figure 2 E-GVAP ACs

Further detail of the current setup, which will be the backbone of E-GVAP for the next phase can be found in Annex 2. A main reason for this particular distribution of tasks between the three institutions is that E-GVAP was set up using expertise and software developed and installed at the 3 institutions in GNSS meteorological research projects prior to the start of E-GVAP, in order to be quick and cost effective.

An essential aim in the next phase is improved timeliness, to fulfill requirements from local, rapid refresh NWP and nowcasting (see the approved E-GVAP requirements for details). The criteria to be used for timeliness are,

Level	Hourly ZTD estimation	Percentage	Sub-hourly ZTD estimation	Percentage
Threshold	120 min	-	30 min	90 %
Target	90 min	90 %	15 min	75 %
Goal	60 min	75 %	5 min	-

Table 1, timeliness criteria for the ZTD timeliness monitoring.

The criteria for ZTD precision is that ZTD OmB (GNSS ZTD estimate [“Observation”] minus NWP ZTD estimate [“Background”]) standard deviation is 15 mm or below. The real ZTD uncertainty is significantly lower, as the main part of the OmB offsets is due to the NWP. That´s known from comparison of GNSS to radiosonde ZTD, from comparison to GNSS ZTDs obtained in post processing (later processing, more precise estimates), and comparison to IWV derived with WVR (water vapour radiometers) and radio telescopes. Information on such comparisons is exchanged at the expert team meetings. However, such comparisons do not include all GNSS sites and ACs, therefore the OmB wrt. NWP will be the core comparison method in the automated system wide quality monitoring.

The current monitoring is already done at a very detailed level, treating each AC & solution and site combo (i.e. individual sites in solution METR from METO) separately. Dividing them into the different product types, hourly and sub-hourly, is therefore straight forward.

How to deal with emerging issues and key assumptions

Potentially STDs can lead to a significant expansion of the total data volume. However, this is not expected initially. Currently the GNSS ZTDs are kept on-line for more than two months on the Met Office ftp-server, a large amount of on-line capacity for fresh GNSS data can therefore be gathered by reducing this period.

It is assumed the EUCOS QMP will continue to estimate timeliness wrt. the DWD observation database, and that E-GVAP will continue to provide daily ZTD offset statistics to the EUCOS QMP. A main benefit of the EUCOS QMP is that is provides a single entry for members to monitoring information on all EUMETNET observation programmes. The E-GVAP own monitoring is more detailed, providing information of specific importance to the E-GVAP team and the ACs.

Note on the proposal update March 19, 2018

The E-GVAP proposal of January 15 was reviewed by a review team, requesting several clarifications by the E-GVAP bidders in a double question/answer sequence. Following a decision by STAC/PFAC these clarifications should be included in an updated proposal. A little of the clarifying text has been included in the "proposal for requirement" boxes under the individual Targets in the table below. However, many questions regarded groups of Targets. The clarifying text for those is included separately later in the proposal, in order to ease reading and understanding of the text. Clarification text regarding the technical part is placed at the end of section5 (Method Statements), clarification text regarding economy is placed at the end of section 8: Economy. In addition a sub section on risk has been included.

Include a tabular technical proposal

Programme management, target 1-7

Target no	Requirements	Rate	**Proposal for requirement** *Responsible E-GVAP partner*
1	Formalisation of contacts to Observation Programme and EUMETNET Secretariat, by March 2019. Establishment of contacts to geodetic institutions, Setup up of expert teams, by June 2019. Coordinate with STAC a succession plan for the Programme, by autumn 2019.	M	Continuation of already existing contacts, expert teams and succession plans. Renewal of contacts to Obs PRG if Obs PRG team is new. *DMI, deadline March 2019*
2	Close collaboration with Obs. PRG and EUMETNET Secretariat	M	As in current phase. *DMI, continuous*
3	Annual expert teams and members meeting. Periodic reports and expert team meeting presentations.	M	As in current phase. All material from meetings will be made available via the Portal and the E-GVAP homepage. *DMI, supported by partners and expert team members*
4	Ensure continuation of the established, fruitful close collaboration with the geodetic community.	M	As in current phase, which is based on contacts at meetings (such as EUREF annual symposium (main yearly geodetic meeting), E-GVAP annual, and EGU) plus personal contacts. Three of the current members of the E-GVAP team have

Target no	Requirements	Rate	**Proposal for requirement** *Responsible E-GVAP partner*
			contacts within GNSS geodesy dating back to around 2000. *DMI, supported by Met Office and KNMI, continuous.*
5	Work to further improvement of the portability of the infrastructure.	M	When developing new software or purchasing equipment, portability and documentation will be carefully considered. *All 3 E-GVAP partners*
6	Work towards INSPIRE compliant data production chains and INSPIRE compliant data itself.	M	Currently INSPIRE has no requirements as regards ground based GNSS delay data. If the situation changes E-GVAP will adhere. It is likely INSPIRE has other requirements regarding some of the same GNSS sites, when used as positioning tools and to establish the European reference frame. That is for EUREF/national cadestre to deal with. *Monitoring: DMI* *In case of required changes: All 3 partners, EUREF and ACs, with DMI lead.*
7	Help draft proposal of requirements phase V of E-GVAP. By end 2022.	M	Develop requirements for E-GVAP-5 in consultation with members, other users and expert team members from both expert teams. See also Targets 4, 28, 29, and 30. *DMI, with input from partners. Deadline end of 2022.*

Maintenance of operational service, targets 8-15

Target no	Requirements	Rate	
8	Ensure the operational E-GVAP system is maintained and continues to run.	M	The current system will be continued. See description in Annex 2. *All 3 partners*

Target no	Requirements	Rate	
9	Ensure that data server and data monitoring facilities have backups in case of failure, so minimising the risk of a complete lack of ZTD/IWV/STD data.	M	The current data exchange system is true 24/7 with backup computers, it will be continued. Part of the current monitoring system is true 24/7. Other parts of the monitoring are running on 24/7 systems *Data exchange facility: Met Office* *IWV derivation and presentation: KNMI* *Monitoring: All 3 partners*
10	Ensure running of sufficient monitoring and validation tools.	M	The current monitoring and validation tools will continue, with some enhancements (see target 17 and 24). *All 3 partners*
11	Ensure running of AQC, to guard against use of data in case of sub-system (AC) widespread errors in DA.	M	The E-GVAP will be continued in phase 4. It is currently being set up. (In the remote case it is not finished 2018, it will be finished first year E-GVAP-4). The main purpose of the AQC is to detect eventual AC wide problems very quickly. Some amount of fine tuning will take place early E-GVAP-4, to reach the right level between too few messages and spam (when just a few GNSS sites are off). *Running AQC: DMI* *Exchange facility: Met Office (ftp-server)*
12	Ensure provision of meteorological support for expansion of GNSS observing networks, including provision of meteorological data as agreed in the EUREF EUMETNET MoU.	M	Extraction of radiosonde data for GNSS ZTD validation by ACs will continue. *Extraction of data: DMI* *Exchange facility: Met Office (ftp-server)*
13	Update Product Requirements Document as requested by expert team on data usage, members and Obs SET.	M	Will be put on the E-GVAP annual meetings agenda every year. *Lead DMI, input from expert teams, members and Obs SET.*

Target no	Requirements	Rate	
14	Continue the construction of IWV animations for use in nowcasting.	M	The current setup will be continued. It is based on a combination of GNSS ZTD and pressure and temperature data from SYNOPs. *KNMI, supplemented by Met Office Exchange facility: KNMI (www)*
15	Coordinate the meteorological exploitation of national sources of GNSS data by helping the NMSes achieve their cost-effectiveness goals.	M	Help members to a) obtain GNSS ZTDs from their country, by liaising with national geodetic institutions, and b) help members utilize GNSS ZTDs and other data by distributing experience and expertise from the E-GVAP expert user group. *DMI, supported by partners and expert teams*

Improvement of operational service, targets 16-22

Target no	Requirements	Rate	
16	Ensure operational migration to sub hourly processing and data distribution.	M	By updated User Requirements and demonstration of NWP nowcasting results convince more ACs to do sub-hourly processing. In addition consider to make to processing streams, if only some of their GNSS raw data is available sub-hourly. *DMI, supported by partners, expert teams and ACs.* *Milestone: All ACs currently doing sub-hourly processing with hourly uploads to have changed to sub-hourly uploads by end 2019.*
17	Improve resolution of timeliness monitoring to 5 min bins, by end 2019.	M	The bin-size in the current E-GVAP timeliness monitoring done at UK Met Office will be reduced to 5 min.

Target no	Requirements	Rate	
			Met Office, deadline end of 2019
18	Attempt access to global data, to help members running global models	U	By contact to international GNSS geodesy, gradually expand global coverage by including oversea ACs. *DMI, with support from partners and ACs.*
19	Provide IWV in grib format, by end 2019	M	The data (numbers) used in construction of the IWV animations (pictures) made by KNMI will be made available in grib format on the UK Met Office ftp-server. This will enable Members to provide forecasters 2D IWV maps using member specific visualisation tools. *KNMI, deadline end of 2019.*
20	ZTD to IWV converting software and instructions to members, by end 2020	N	The software currently used for ZTD to IWV conversion will be made available. It functions best with access to high resolution SYNOP data. As currently these are not exchanged on a European scale, Members obtain the optimal IWV product by doing an own conversion. The released ZTD to IWV conversion software package is to include guidance how to use it for conversion to IWV and for construction of 2D fields from the IWV point values. Members will be welcome to contact the E-GVAP-4 team in case of problems with the conversion and map construction. The text will also refer to the science behind the conversion and the chosen technical solution.*KNMI, deadline end of 2020*
21	Ensure to report on the progress of ZTD/IWV data assimilation research and promote the use of GNSS water vapour measurements in operational meteorology.	M	To be done at annual E-GVAP meetings, material from those made available to everybody, through E-GVAP periodic reports and homepage *DMI, supported by expert teams.*

Target no	Requirements	Rate	
22	In collaboration with the geodetic community, and possibly EUMETSAT, attempt to improve quality, security and timeliness of access to so-called ultra-rapid "satellite orbit and clock error estimates". This will enable more ACs to do PPP data processing, which speeds up the processing and eases estimation of slant delays.	U	The ultra-rapid satellite orbit and clock error estimates is a product gradually improving. It requires geodetic expertise to make, but meteorology (EUMETSAT/EUMETNET) might at some stage help to increase the robustness of the product, by running a version of the estimation software on a true 24/7 computing facility. *DMI*

New activities, targets 23-30

Target no	Requirements	Rate	
23	Enable operational distribution and timeliness monitoring of STDs by year 1.	M	Start using existing COST format (used between AC GFZ and DWD in tests at the moment). Exchange via ftp-servers at UK Met Office. As done for ZTDs, except the above format restriction. *Met Office (exchange facility)* *DMI (agreements on data exchange)* *Deadline end of 2019*
24	Enable quality monitoring of STD data, by year 3.	M	Obtain STD OmBs from members doing STD NWP assimilation. Set up derivation of automated STD OmB statistics based on that, using similar methods as for current statistics on ZTD. *DMI, with support from members assimilating/testing STDs Deadline end of year 3.*
25	Encourage more ACs to do STD estimation.	U	Encourage at E-GVAP expert team and EUREF annual symposium meetings. In particular provide NWP experience on use

Target no	Requirements	Rate	
			of STDs at the expert team meetings. When use of STD is demonstrated to be superior to use of ZTD, more ACs will become willing to spend the extra resources in setting up and running STD estimation. STD estimation is simplified for the ACs when PPP become more widespread (see target 22). *DMI, supported by expert team on data usage*
26	If true real-time ZTD and STD estimation matures, attempt to include among E-GVAP products.	U	Encourage ACs with the necessary expertise to do real-time estimation. If/when quality is sufficient, include among standard E-GVAP products. *All 3 partners, supported by the expert teams*
27	If/when NRT 3D water vapour estimation matures, attempt to include among E-GVAP products.	N	Use an existing 3D data format, after consultations with members, for the data exchange. *Monitoring of progress: DMI, supported by expert teams.* *Eventual data exchange: Met Office (ftp-server)*
28	Ensure monitoring and reporting on progress in "next generation" GNSS meteorology, such as production and usage of ZTD gradients, STDs, and 3D water vapour fields derived by tomographic inversion of GNSS based STDs.	N	[Continue to] Include some of the relevant experts in E-GVAP expert teams. Follow literature and include comments in periodic reports when relevant. *DMI, supported by expert teams*
29	Experimental estimation and validation of ZTDs from GNSS observations from ships.	N	Provide contacts between members and other institutions with access to high quality GNSS data from ships and ACs with the expertise and interest in testing ZTD estimation based on those. May lead to common research applications.

Target no	Requirements	Rate	
			If ship ZTD/STDs of sufficient quality becomes available, include among E-GVAP products. Currently this is R&D. E-GVAP can support such activities, both by connecting relevant parties prepared to do the R&D together, and by aiding the exchange of data and validation tools, via our ftp-server and through monitoring the ZTDs against the UK Met Office global model. *Establishment of collaboration: DMI* *Monitoring of eventual data: All 3 partners (via upload to Met Office exchange facility = automated inclusion in standard monitoring).*
30	Conversion of InSAR delay measurements to high res. ZTD maps by use of ground-based GNSS derived ZTDs.	N	Monitor and report on progress in this field. Stimulate by inviting experts to E-GVAP meetings when relevant, and by help providing NWP or SYNOP data if beneficial in case studies. Henrik Vedel is a co-convenor of the EGU session on atmospheric observations by space geodetic techniques, which includes both ZTD/STD GNSS meteorology and use of InSAR to observe the atmosphere. Use of InSAR to obtain estimates of current ZTD is true research, many years before a product useful in operational meteorology will become available. E-GVAP can support through monitoring and data exchange, resources permitting, but not partake directly in the R&D work. *DMI*

5. Method Statements

Programme management, targets 1-7

Method Statement Number 001 (E-GVAP)**: management team: who, with which experience, in charge of what?**
The E-GVAP team will consist of Henrik Vedel (DMI), Siebren de Haan (KNMI), Jonathan Jones and Owen Lewis (UK Met Office). HV will be in charge of management. See CV regarding HVs management experience. All members of the E-GVAP team will contribute to the operation and development of the E-GVAP system. See Target explanations and Annex 2 for details, CVs regarding expertise.
Method Statement Number 002 (E-GVAP): **exchanges with third parties, including the part of national focal points**
E-GVAP is based on a volunteer collaboration between GNSS geodetic institutions, the ACs and EUREF, and E-GVAP/EUMETNET. This will continue. A general MoU between EUREF and EUMETNET exists, the new phase does not require a renewal. On the national level E-GVAP members are to attempt liaise with national geodetic institution on access to GNSS data and ZTD estimation. E-GVAP can guide in this process. In countries where there is no E-GVAP member E-GVAP will attempt to liaise with geodetic institutions to obtain GNSS NRT ZTD estimates. In figure 1 the blue ACs are ACs in non member countries.
Method Statement Number 003 (E-GVAP): **How will you develop relationships with GNSS data providers and the geodetic institutions?**
Through a continuation of our expert teams, annual expert team meetings, participation in EUREF symposia, running of EGU session on GNSS meteorology ("Atmospheric monitoring using space geodetic techniques") and personal contacts. The E-GVAP team includes people who have collaborated with geodetic institutions on GNSS meteorology since around year 2000.

Maintenance of operational service, targets 8-15

Method Statement Number 004 (E-GVAP)**: Describe the setup to be used for data upload and distribution including its robustness against computer failure.**
The ACs uploads ZTDs to an ftp-server at Met Office (user and password restricted access) in E-GVAP cost format. Various checks on the content and format is done, including a check for GNSS site names, in order to ensure no duplicate names among the E-GVAP sites (there is no unique, global naming requirement in GNSS geodesy). Operational uploads are BUFR encoded and distributed via GTS. All uploads are transferred to another ftp-server at Met Office from where they can be downloaded (user and password restricted access). The involved computers belong to the 24/7 component of the Met Office computer environment, with backup available in case of hardware failure. More details in Annex 2.

Method Statement Number 005 (E-GVAP): **Describe the setup to be used for E-GVAP quality and timeliness monitoring and validation, and for provision of validation statistics to the EUCOS QMP**
The current setup will be continued with enhancements. Daily and monthly timeliness monitoring is done both at Met Office (available via ftp, based on arrival times in Met Office database), at the EUCOS QMP for the data distributed via GTS (based on arrival times in DWD database, available at EUCOS QMP). The time resolution of the timeliness monitoring will be enhanced to 5 min bins, in order to monitor more precisely timeliness of sub-hourly data. Current data availability is monitored at KNMI (available via www on E-GVAP homepage). Daily and monthly data availability is monitored at Met Office, available via ftp. The backbone of the quality monitoring is ZTD OmBs relative to the Met Office global NWP model. OmBs are extracted for all ACs & solutions & sites against the NWP first guess. The OmBs are collected by DMI, where ZTD offset statistics is calculated. Results are uploaded daily to the EUCOS QMP. Monthly statistics is deduced at DMI, it will be made available via ftp (currently it is shown at meetings and in reports). In addition quality monitoring is done against radiosonde ZTDs, and against ZTDs obtained in post processing (more precise than NRT ZTDs), by several of the ACs. This provides a better insight in GNSS ZTD precision than monitoring against NWP, because NWP ZTD is not very precise, but does not include all ACs and sites. Results from this type of monitoring are available at some of the ACs and EUREF, and information exchanged at expert team meetings.
Method Statement Number 006 (E-GVAP): **Describe setup of active quality control.**
The AQC will be based on inter-comparison of ZTDs from GNSS sites for which ZTDs from at least 3 different ACs are available, valid at (approximately, fraction of hour) the same time. The full results of the AQC will be available via ftp. An automated warning will be submitted to users in case the AQC detects an AC & solution wide problem.

Improvement of operational service, targets 16-22

Method Statement Number 007 (E-GVAP)**: Sub-hourly data processing and distribution, improved timeliness monitoring.**
The ACs not already doing sub-hourly processing will be urged to do so. ACs doing sub-hourly processing, but currently uploading results hourly will be asked to upload sub-hourly. The time resolution of the E-GVAP timeliness monitoring at Met Office will be enhanced to 5 min bins, enabling detailed monitoring of timeliness.
Method Statement Number 008 (E-GVAP): **Adherence to new performance standards**
In connection with the derivation of E-GVAP-4 requirements a questionnaire on member requirements to E-GVAP products was made. The timeliness criteria in table 1 are based on the results of the questionnaire and the EUCOS performance standards. E-GVAP monitoring will enable us to notify ACs in case the timeliness and quality is not adequate.

Method Statement Number 009 (E-GVAP): **IWV in grib format**
E-GVAP currently produces IWV map sequences. In construction of maps, 2D fields of IWV are derived as an intermediate step. These fields will be output in grib format and made available to members.

New activities, targets 23-30

Method Statement Number 010 (E-GVAP)**: How do you plan to quality control STDs?**
By obtaining OmBs from members doing STD assimilation and deduce OmB statistics based on those, similar to the OmB statistics done for ZTD.
Method Statement Number 011 (E-GVAP): **How will you engage in development and usage of "next generation" ground-based GNSS meteorological products?**
Through our contacts with GNSS processing experts at expert team meetings, EUREF symposia and EGU. Some of the ACs are world leading institutions, partaking in research projects on GNSS meteorology. E-GVAP team institutions and/or E-GVAP members will be encouraged to engage in such research project applications (outside of E-GVAP funding). In addition E-GVAP will provide meteorological data for "next generation" meteorological exploitation, resources permitting.

Clarification on the impact of Galileo upon E-GVAP

The European GNSS Galileo is currently under installation, with 14 out of approximately 24 satellites now in orbit. The American GPS and the Russian GLONASS are currently fully installed, and China is establishing their system BeiDou. New geodetic GNSS recievers record signals from all 4 GNSS systems, there is no switch away from GPS, or GPS+GLONASS, to Galileo. With regard to ZTD the impact of the extra GNSS systems is negligible. With more satellites the noise in ZTD gradient estimates is reduced. The main meteorological benefit from more GNSS satellites is that from each GNSS receiver more STDs will be available. Potentially Galileo will become a benefit to E-GVAP. It is certainly not a threat.

Clarification on the increase in Analysis Centres (ACs) and GNSS sites

Wrt. adding countries: There will be a main focus on Member countries not covered by an AC currently, and countries not covered which are geographically close to Member countries. East Europe is under-represented AC wise, while many East European countries do have functional GNSS networks. E-GVAP will continue attempts to include those. There will be a focus on re-enabling the distribution GNSS ZTDs from the US, and also to obtain GNSS ZTDs from Canada, as it has been seen from the TAMDAR impact studies that humidity observations from North America can benefit NWP forecasting for Europe. Because some members run global models, there is at present no area on the globe E-GVAP would not include if an AC is willing to provide ZTD data.

Wrt. densification of the network in currently included countries: It is the ACs that negotiates access to additional raw GNSS data in their area. Sometimes with the help of the local national met office. The ACs in countries with obvious holes in their coverage, like Italy, spend significant time trying to obtain data from the regions not well covered. NWP impact studies reveal with regards to high

resolution NWP most of the E-GVAP territory is far from saturated with GNSS ZTDs, hence there is no region where additional GNSS sites will not be helpful.

E-GVAP reimburses the travel costs of the members of the expert teams in the annual meetings. As the number of ACs grows, the travel budget might become too small. To control this, it is regarding the setup of the expert team on data processing specified: "*Setup* The main E-GVAP analysis centers (ACs) are members of this expert team. From the EGVAP team, each of the three team institutes has one member in the expert team on data processing." The word *main* instead of *all* provides E-GVAP flexibility to invite those of the other ACs to the expert team meetings, to whom the meeting at the time is most relevant, without breaking the budget. At present the travel budget is adequate. E-GVAP does not consider the non-European ACs to be ACs E-GVAP should travel support.

Clarification on the E-GVAP programme architecture. Robustness and portability

The E-GVAP data flow, exchange and monitoring facilities are distributed between all three partners, though with the UK Met Office data distribution and data encoding hub being by far the largest and most essential. This will continue in E-GVAP-4. The system is not centralized and the main reason for this is: Computer safety setups. These security setups would prevent DMI and KNMI personal from manipulating the parts of the system they are responsible for if everything ran at UK Met Office. As a result DMI and KNMI would need to run parallel systems to do development, then have somebody at UK Met Office install it, change links, databases, recompiling for Met Office computers, resulting in the use of more computer facilities and more manpower than today.

Centralization would not by itself increase portability. For example compilation of software at DMI is done one way for an ordinary PC and another way for the hpc, submission of jobs on the two types of systems is very different. The complexity is more a question how many types of operating systems and computer architectures are involved, does part of the system require specific commercial software, does part of the system require access to specific resources only available at specific institutions.

The vast majority of the E-GVAP setup runs on Linux computers, from PCs to specialized hpc´s, and uses free software. The UK Met Office GNSS ZTD estimation is done using Bernese software, which requires a license. The NWP ZTDs for quality control are extracted from the UK Met Office global model and from the KNMI HIRLAM model. The DMI extraction of radiosonde data requires access to a database with radiosonde observations from Europe and part of the North Atlantic Ocean. Another bidder would have to extract from other NWP models and observation databases. For this reason neither current nor future software can become fully portable. Parts of it must be tailored to access NWP and observational data at specific institutions. Such access is different between members. What E-GVAP can do is to make all other components easily portable. We think that is the case with the current tools, except that the GNSS processing software used by E-GVAP members cannot be handed over. When developing new software and new webpage E-GVAP will ensure it can be run on multiple computer platforms, avoiding use of specific, specialized in-house facilities or commercial software.

Robustness: The components at UK Met Office used to receive, encode and distribute GNSS ZTD data are true 24/7 operations, which means that on top of standard 24/7 surveillance and robustness against external power failure, backup computers are also available. The extraction of OmBs from UK

Met Office global model, and monitoring of data arrival and timeliness at UK Met Office are also 24/7 operations. The monitoring and data extraction component at DMI is run on the DMI dev component of the DMI hpc, which is a 24/7 system, but with no reserve computer. The quality monitoring results derived at DMI are uploaded to the EUCOS quality monitoring portal (which monitors also ASAP, AMDAR and SURFMAR). We do not know the details about the robustness of the EUCOS QMP. EUCOS QMP does an own registration of timeliness based on arrival of data to the DWD database. KNMI monitoring is based on NWP HIRLAM and the KNMI database, which is 24/7. The validation programs run on 24/7 computers, the programmes themselves are monitored 8/5 (office hours).

Clarification on increase of sub-hourly processing

Expansion rate for sites with sub-hourly processing: The expectation is that initially 5-6 ACs will provide sub-hourly data, gradually more. How fast it will happen depends not only on the ACs, but also on their rate of access to raw GNSS data. In recent years we have seen an increase in public institutions in European countries easing access to their data. This tendency can be expected to benefit ACs that currently have only hourly access to data from regional GNSS networks. The speed at which thisis impossible to forecast.

Sub-hourly processing is most important to the Members that run, or plan to run, models with short cut-off times relative to current E-GVAP timeliness requirements. DWD and Meteo France are prime examples. In practice E-GVAP will encourage all ACs simultaneously, as the effort will be the same to the E-GVAP team.

Ensure/urge sub-hourly processing: E-GVAP only has full control of the data handling at the E-GVAP end. We can ensure we are prepared to handle sub-hourly distribution and monitoring operationally. There are some ACs already providing sub-hourly data, some are currently testing sub-hourly processing, and therefore ACs can and will provide sub-hourly data operationally. E-GVAP cannot formally ensure other ACs will start to do so. That is the drawback of obtaining the AC services at no cost (except for the expert team meetings and our provision of some meteorological data to the ACs). However, based on the experience of the collaboration between EUMETNET and the ACs so far, we can expect many of the ACs will start doing sub-hourly processing when they have access to a sufficient amount of raw data in the required time window. In this process it is important that Members help E-GVAP in providing proofs that access to sub-hourly ZTDs is of benefit to Members.

Clarification regarding the method to push for sub-hourly processing

All ACs like to see their ZTDs provide benefit to meteorology, and by demonstrating the benefits when using sub-hourly products, Members can convince more ACs to do sub-hourly processing. E-GVAP relies on members and expert teams to provide that evidence. A milestone is included in the Target table. As E-GVAP and the ACs have little control of future progress regarding the access rate to raw data, it would not be wise to introduce further milestones.
To do sub-hourly processing is not very complicated, if one is already capable of doing hourly processing. The real issue is to have access to raw data quickly enough. A second issue is how we in meteorology balance our wishes for high spatial GNSS site density and high quality ZTD on the one side (hourly data) , versus reduced spatial coverage and reduced ZTD quality on the other side (sub-

hourly data). Different members might not agree on the answer. Some ACs have the resources to do both hourly and sub-hourly processing, in which case we then ask for both; but others do not have this capacity. The balance has to be found gradually, taking into account Member wishes and AC capabilities in countries and regions.

Clarification on delivering operational STDs

The route to operational handling and delivery will follow the same route as for ZTDs. Enable E-GVAP to be able to distribute and monitor STDs. The E-GVAP preparations for STDs part is not very different from the E-GVAP work on ZTDs.

Today one AC is doing STD estimation (GFZ). DWD has made software for assimilation of STDs in the ICON model. KNMI is making software for assimilation of STDs in Harmonie/AROME, and can be expected to also start doing STD estimation. Gradually E-GVAP will attempt convince more ACs to do STD estimation. As with ZTDs, this will rely on demonstrating the added benefits to NWP and nowcasting from using STDs. Currently the added value from STDs on top of ZTDs in an NWP system with plenty of other observations has not been demonstrated. Use of STDs in NWP is currently R&D. The impact results from DWD and KNMI are expected early E-GVAP-4.

Formats: Currently E-GVAP converts and provides COST files with ZTDs and BUFR for the use in NWP. For their operations most users use the cost format, some use the BUFR forma. In addition the E-GVAP conversion tools can convert the two formats used in the US to E-GVAP formats. E-GVAP provides data to some users outside the Members and ACs (with conditions of usage documents), but E-GVAP does not service external users by converting to additional formats.

Both the E-GVAP BUFR format and the E-GVAP COST format have limitations when it comes to STDs. Format discussions have been going on between EUREF experts (in fact two AC leaders, ASI and GOP), E-GVAP team people, and the IGS (International GNSS Service, over-arching EUREF), in consultation with also Michael Bender at DWD and Galina Dick from GFZ, who is preparing assimilation of GFZ STDs in DWD ICON, hence has the best practical expertise currently available. The conclusions so far are that 1) we need to upgrade the formats, the new formats should serve both meteorology and geodesy for our common data exchange and collaboration. 2) BUFR is a meteorology only format, not used in geodesy. On the meteorological side we are therefore free to make BUFR format changes. 3) From meteorology we need certain changes in the COST format to make more efficient the handling of large amounts of STD data. From geodesy there is a wish to enable distribution of other types of atmospheric data in the same, new format, in order to reduce the number of file formats used in geodesy. A new format, including components from the current E-GVAP COST format and from the current SINEX TRO format used in geodesy for other purposes, with enhancements to handle STDs properly, has been proposed, and is currently under review. When we have a bit more practical experience with STDs the BUFR format will be upgraded. E-GVAP will make software that can convert between the various formats.

Initial distribution of STDs in E-GVAP-4 will be in the COST format currently used by GFZ and DWD for data exchange. This is the only feasible way in which to quickly enable distribution of STDs via E-GVAP to a wide range of potential STD users at member institutions.

Robustness: The E-GVAP setup for STD distribution and timeliness monitoring will by end of 2019 be as robust as is the current system for ZTD. In general the ACs do not run 24/7 systems, neither for

ZTD nor will they for STD. As long as one or only few ACs do STDs it will not be possible to run AQC for STDs based on inter comparison of GNSS STDs.

Clarification on computer resources

Neither more ACs nor a movement towards sub-hourly processing is expected to require additional E-GVAT-4 computer resources beyond what is already available to E-GVAP at the host institutions. The reason being that GNSS ZTD data does not fill much in comparison to most other meteorological data. Similarly for sub-hourly data.

Potentially STDs from many ACs would require more disk space. However, we do certainly not expect problems due to this in the first part of E-GVAP-4.

In the current setup GNSS ZTDs are kept on-line for more than two months on the Met Office ftp-server. If disk space becomes a problem, capacity for additional STDs can be obtained, at least for a period, by reducing this data retention time. This would require warning users in due time, in order that they could adapt to these changes. Notice, the main scope of E-GVAP is to service operational meteorology, in which case observations are uploaded or downloaded within minutes or hours, to meet the NWP assimilation cycle and/or forecaster requirements, Members active in operational GNSS meteorology that have not obtained the data within a few hours are unlikely to ever attempt access the data. All E-GVAP ZTD data are stored (at Met Office and DMI), the E-GVAP team from time to time provides archived data from specific periods to Members and others upon request. This service will continue.

Clarification on production and quality assurance

Regarding monitoring of GNSS ZTD quality against NWP: Observations from the other EUMETNET observing programmes, except OPERA, are by EUMETNET monitored against ECWMF. In relation to the Obs Programme requirements being made there are discussions whether changes to the general EUMETNET monitoring of observations should be proposed. This is on a higher and more central level than E-GVAP.

ZTD data received by E-GVAP is monitored against ZTDs from the UK Met Office global NWP model. This includes all solutions from all ACs. The daily statistics visible at the EUCOS QMP and the monthly statistics, both derived at DMI, are based on these OmBs. At the KNMI monitoring site GNSS ZTDs are compared to the regional KNMI HIRLAM NWP ZTDs. The two streams are independent. The ZTD OmB STD < 15 mm is based on the UK Met Office global NWP model. This will continue.

Regarding monitoring of STDs: Timeliness monitoring of STDs is exactly as for ZTDs. Quality monitoring of the STDs will on the E-GVAP side be very similar to what is done for ZTD, becoming based on OmBs of GNSS STD versus NWP. However, E-GVAP has to rely on obtaining OmBs from members doing STD assimilation, operational or in test mode. They have to come from a high resolution NWP for it to be meaningful, which means a local model for the area in which STDs become available.

Regarding demonstrating the benefit of STDs: AC GFZ is expected to deliver STDs for German GNSS sites early E-GVAP-4 (they already to in-house STD estimation), and DWD are planning to do impact

studies using the new high resolution ICON model. KNMI is expected to conduct impact studies once the STD assimilation software for Harmonie/AROME is finished, which is also expected around start of E-GVAP-4.

Regarding IWV animations: The current setup for viewing the IWV animations is no longer visible in a large number of browsers, this will be cured quickly.

Regarding IWV derivation: Potentially the conversion from ZTD to IWV could be based on NWP rather than SYNOP data. That would remedy the lack of access to high resolution SYNOP data for all of Europe in E-GVAP team databases. However, use of data from a coarse resolution global NWP model would degrade the IWV derivation in regions where E-GVAP has access to high spatial and time resolution SYNOP data. With high resolution SYNOP or high resolution full model level NWP the IWV derivation can be optimized. E-GVAP does not on a European scale have access to such data. E-GVAP can provide information to Members that have such information for their region or country on how perform their own conversion from ZTD to IWV.

The KNMI monitoring, validation, and supersite tools present on the E-GVAP website have at the time of the review been showing outdated graphs, which will be fixed before E-GVAP-4. Notice, the monitoring done by UK Met Office, DMI and EUCOS QMP is not affected by this. Reports to ACs about missing delivery and quality are running.

Clarification on Expert Team and Users

Expert team members: Regarding the User Expert Team E-GVAP specifically focus on inviting people that are currently active in GNSS meteorology from each model consortia. The larger Data Processing Expert team it is a mixture of worldwide recognized true experts in GNSS data processing and representatives from ACs that can learn from those. All members are always invited to the expert team meetings, everybody is welcome to bring a contribution, or mail one if they cannot be present.

Forecasters in expert teams: E-GVAP has always encouraged participation of forecasters in the annual meetings. To find a forecaster that spends, or want to spend time, on GNSS based nowcasting, and is allowed to attend an E-GVAP meeting is difficult, and beyond E-GVAP control. Far from enough work has been carried out to draw conclusions about how and when to use GNSS based products in nowcasting. Hopefully access to IWV files that can be viewed using in-house graphical tools at the Member institutions will change this situation.

User expert team members: The scope is to include the main NWP consortia in Europe. Currently the user expert team includes people representing the UK Met Office model system, the HARMONIE/AROME system, and the model system used by DWD and partners which is moving from COSMO to ICON.

Updates of products, requirements, etc. will be communicated through email, meetings, and meting material and requirements documents on the homepage system. User wishes for an update of E-GVAP product requirements are a point at all E-GVAP expert team meetings, to which all members are invited.

Help to Members on usage of E-GVAP data: With the User Expert Team we attempt to represent all NWP systems used by Members, by invitation of the most active experts from each NWP system.

The information about data usage is spread via distribution of the experts presentations, exactly as is the case for progress in other areas of NWP data assimilation.

Help to members using assimilation software: It is not E-GVAP that develops data assimilation software. Help about usage is distributed in a similar fashion to other instructions about usage within the data assimilation NWP. It is mainly through sharing of E-GVAP user presentations, and updates of specific assimilation software, within NWP consortia, that information is spread.

Regarding GNSS on ships: At present no collaboration with E-ASAP I planned, but that might in the long run be a good idea. Currently deriving NRT ZTDs from ships is R&D. It is best carried out on-board ships sailing sufficiently close to land that communication of large amounts of data is not a problem. ASAP currently suffers problems with their satellite based data transfer of radiosonde data. E-GVAP does not own nor deploy GNSS receivers. E-GVAP can support R&D in this field by monitoring and data distribution of experimental ship GNSS ZTDs, but not carry out the research.

Clarification on relations with the ACs and geodesy, and support of those

A cornerstone in E-GVAP is the voluntary participation of non-meteorological institutes, agencies and universities. They provide and process 24x7x365 GNSS data to provide estimated ZTDs to E-GVAP, most of them without specific funding. Like other public institutions they are increasingly being requested to justify their activities, it is vital that E-GVAP help them do that as regards their provision of ZTDs to E-GVAP and European meteorology.

The MoU between EUMETNET and EUREF requires both parties to acknowledge the other party by citation in publications. There are many common journal papers which have been made by individual E-GVAP members in collaboration with individual ACs. Research projects and applications including E-GVAP members and ACs have also been made (2/3 of the proposing team of the recent EU Cost Action GNSS4SWEC were people from leading ACs and the E-GVAP team, Jonathan Jones from the E-GVAP team was chairman of the action). This type of collaboration will continue.

E-GVAP provides to geodesy meteorological data that are used for validation of the GNSS data processing taking place under EUREF.

To further the support of the ACs and geodesy, E-GVAP will update the E-GVAP homepage to enhance visibility of the ACs data processing, usage and impact of the GNSS data in meteorology, and enhance visibility of joint work.

Further links to GNSS data processed for climate monitoring will be included. E-GVAP data should not be used at all for climate monitoring, but E-GVAP receives many requests for E-GVAP data from the climate community.

It is likely that in connection with the developments towards true real-time positioning services, the ACs will become interested in additional meteorological information in order to augment such information to the position estimating units in their own system, which will make the data flow between geodesy and meteorology more even, thereby strengthening the collaboration.

6. Organisation

The bidding team has been running E-GVAP since the start. The division of work will continue as is, with the add-ons mentioned in the requirements tables.

Contracts will be made between DMI & KNMI and between DMI & Met Office covering the work.

Expert teams

Currently E-GVAP has two expert teams, the expert team on GNSS data processing and standards and the expert team on GNSS data usage. The teams meet annually in a combined meeting to which also members of E-GVAP are invited. This to enable efficient sharing of knowledge and guidance between data producers, data users and members. The expert teams shall continue in the next phase.

The expert team on GNSS data processing is extremely important to E-GVAP, as it addresses common issues and helps coordinate ACs. Besides addressing E-GVAP specific issues, the meetings helps to coordinate activities on future research in GNSS meteorology as many members of both expert teams are involved in such research besides their E-GVAP specific work. One of the main reasons for the interest of geodesists to be involved in GNSS meteorology is the possibility of improving GNSS data processing in general through collaboration with "meteorology". The interplay between the user and producer expert teams is hence very important.

E-GVAP Expert team on GNSS data processing and standards.

Setup The main E-GVAP analysis centers (ACs) are members of this expert team. From the EGVAP team, each of the three team institutes have one member in the expert team on data processing. The chairman and the E-GVAP programme manager may invite selected experts on "next generation" GNSS processing not belonging to any of the ACs to give presentations at the meetings.

Purpose

- Exchange knowledge on the GNSS data processing done for E-GVAP, leading to best practices and improved homogeneity of the E-GVAP GNSS atmospheric delay products.
- Exchange knowledge on "next generation" GNSS data processing.
- Provide advice to E-GVAP on technical and scientific matters.
- Liaise with geodetic community

Procedures The team meets once a year. The meeting is common with the meeting of the expert team on E-GVAP data usage. E-GVAP reimburses travel costs of the processing experts (maximally one re-imbursement per AC). The meetings are open to anybody interested.

Chairman The Chairman of the E-GVAP Expert Team on GNSS data processing is a member of the E-GVAP team, currently Jonathan Jones, Met Office.

Reporting The E- GVAP Expert Team on GNSS data processing reports through the Programme Manager to the members and to the Observations Capability Manager, who reports to the STAC.

All presentations from the expert team and plenary board meetings have to be made available via the E-GVAP homepage and the EUMETNET portal.

E-GVAP Expert Team on Data Usage

Setup The team consists of approximately one expert on E-GVAP data usage from each of the "large" NWP model systems utilised by E-GVAP members. From the EGVAP team, each of the three team institutes have one member in the expert team on data usage. In addition experts on "next generation" data usage may be invited by the chairman.

Purpose

- Exchange knowledge on usage of E-GVAP data in meteorology, thereby providing feedback to the E-GVAP data producers, and provide material assisting members in using E-GVAP data.
- Exchange knowledge on usage of "next generation" GNSS in meteorology.
- Provide advice to E-GVAP on technical and scientific matters
- Liaise with geodetic community.

Procedures The team meets once a year. The meeting is common with the meeting of the expert team on GNSS data processing. The meetings are open to anybody interested. E-GVAP reimburses the travel cost of the GNSS data usage experts. Meetings are open to anybody interested.

Chairman The Chairman of the E-GVAP Expert Team on Data Usage is a member of the E-GVAP team, currently Henrik Vedel, DMI.

Reporting The E- GVAP Expert Team on Data Usage reports through the Programme Manager to the members and to the Observations Capability Manager, who reports to the STAC. All presentations from the expert team and plenary board meetings have to be made available via the E-GVAP homepage and the EUMETNET portal.

A main reason for the large travel budget is that E-GVAP reimburses the travel expenses of the experts for their participation.

RISKS

The E-GVAP Risk Register currently lists 3 risks:

1. Complete loss of an AC or complete loss of a Member.
2. Demands to data sharing of E-GVAP data outside what current agreements with the ACs and EUREF permit.
3. Loss of NOAA data.

Regarding 1: An AC might be forced to withdraw due to economic reductions. We are not aware of reductions on this level.

An AC might lose interest in E-GVAP participation, if it does not experience any benefits, for itself and/or for weather forecasting. Increasing demands from E-GVAP increases the risks of losing an AC.

Some ACs relies for the majority of their ZTD estimation on raw GNSS data from an external data provider (for example the UK Met Office AC METO obtains most data it processes from the UK

Ordnance Survey). Losing such data is similar to losing an AC, both regarding risks, effect, and mitigation.

Mitigation is done by ensuring close collaboration between meteorology and geodesy, as explained earlier in the proposal, including enhanced visibility of the ACs and the impact of their data, and provision of meteorological data for the ACs. The more useful meteorological data become in GNSS positioning, the more the risk of losing an AC is reduced.

In case a small AC stops, it might be possible to transfer the processing to another AC, provided access can be granted to the raw data. For a large AC it might possible to find another geodetic institute which can function as ACs within the country, or an alternative could be for a Member to become an AC, with external help to set up the processing. Notice that currently the UK Met Office, KNMI, and IMO functions as ACs, but there is no current plan in E-GVAP-4 to make more Members become ACs.

Regarding 2: Currently INSPIRE does not require exchange of ZTDs. If future INSPIRE or other regulations make it mandatory to exchange of data beyond what current agreements with EUREF and the ACs allow, an attempt must be made to change the agreements. As the concept of *free data* is spreading in Europe it is not unlikely the ACs would agree to a wider distribution of their ZTD data.

Regarding 3: NOAA has stopped its distribution of US ZTDs after outsourcing of the processing. The EUMETNET Chairman has contacted NOAA/NWS on the matter, but it is not expected NOAA will restart the distribution while the present contract on processing is running (5 years from autumn 2016).

Meanwhile the NOAA risk is a placeholder for E-GVAP to obtain again US ZTDs by other means. Currently alternative ZTDs can be obtained. E-GVAP provides software that can convert between those files and E-GVAP formats, but E-GVAP is not at present allowed to distribute the data. E-GVAP-4 will attempt to obtain an agreement on distribution of the data.

Other risks

Loss of key personal: A succession plan will be communicated to EUMETNET early in E-GVAP-4. Notice that the E-GVAP team consists of 4 people at three institutes, with a large overlap in experience and contacts to geodetic partners, making it fairly robust against loss of an individual.

7. Benefits to users

Figure 3 is a recent example of the impact per observation from different observing systems, with GNSS delays having the second largest impact. It both demonstrates that GNSS delays are useful, and that the NWP system is far from saturated with this type of humidity data. Hence, more GNSS delays will benefit the NWP system.

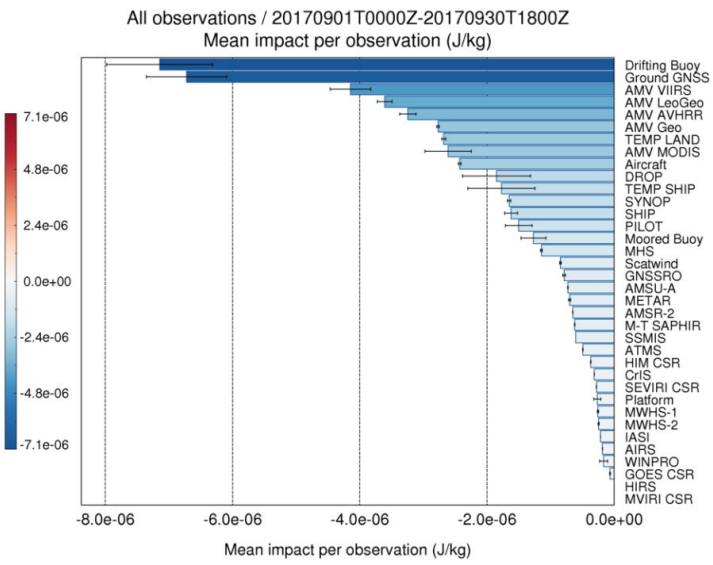

Figure 3. Impact per observation of various types of observations in Met Office global NWP (from Owen Lewis presentation at the E-GVAP expert team meeting, Nov 2017).

STDs are expected to provide additional benefits in high resolution NWP on top of ZTDs, as they provide information about local atmospheric asymmetries to which high resolution NWP is sensitive, but this has not been tested long enough in an operational NWP setting for this to be proven.

The plans on improved timeliness will benefit members planning high resolution NWP with short cut-off times.

8. Budget

The main cost in E-GVAP is staff and travel. Significant computer resources are needed to run E-GVAP, but these are mainly provided as in-kind contributions at the three host institutions.

Host-wise the budget, not including in-kind contributions, is divided as

All costs are annual totals in €	2019	2020	2021	2022	2023	TOTAL
DMI	47400	47400	47400	47400	47400	237000
UK Met Office	28300	28300	28300	28300	28300	141500
KNMI	28300	28300	28300	28300	28300	141500
Travel costs	25000	25000	25000	25000	25000	125000
Total	129000	129000	129000	129000	129000	645000

Item-wise, including in-kind contributions, it is divided as,

All costs are annual totals in €	2019	2020	2021	2022	2023	TOTAL

Project/Programme/Operational Management Costs	52790	52790	52790	52790	52790	263950
Other staff costs	32230	32230	32230	32230	32230	161150
Travel costs	25000	25000	25000	25000	25000	125000
Equipment costs	0	0	0	0	0	0
Infrastructure costs	3340	3340	3340	3340	3340	16700
License costs	0	0	0	0	0	0
Supplier costs	0	0	0	0	0	0
Organisational overheads	57555	57555	57555	57555	57555	287775
Sub-Total	170915	170915	170915	170915	170915	854575

In-kind contributions						
Financial	41915	41915	41915	41915	41915	209575
Other (e.g. equipment, IPR)						
Sub-Total	41915	41915	41915	41915	41915	209575
TOTAL	129000	129000	129000	129000	129000	645000

The specified programme costs are staff salary, plus some infrastructure costs at KNMI. At all three institutions there is an overhead to the staff costs. This overhead covers the combined costs of access to computing facilities, secretary help, warm office, etc. Only a small part of the standard overhead rates at DMI, KNMI and UK Met Office are requested from EUMETNET. The overhead rates are derived according to national regulations, and cover the actual (average) additional costs on top of salary.

The staff at DMI, KNMI and UK Met Office will spend 0.49, 0.22 and 0.25 FTE per year, totaling 0.96 FTE per year on E-GVAP.

Regarding travel budget, we estimate, based on the current situation and rate of AC additions that the travel budget will be adequate. Should it not be the case, we might need to ask PFAC/STAC and Assembly for an additional contribution. It is very unlikely this will happen in the first part of E-GVAP-4. Notice also that the setup of the expert team on data processing enables flexibility regarding the number of ACs invited/reimbursed for participation in annual the expert teams meeting.

It is not foreseen E-GVAP-4 itself need to procure computer resources. The reason being that GNSS ZTD observations do not fill much in comparison to standard computer resources and other observations. Sub-hourly ZTDs does not in itself mean more ZTDs, just that ZTDs are derived more often and arrive with a shorter delay. Some duplication is foreseen, though, in the form of ACs doing both hourly and sub-hourly ZTD estimation, but problems are not respected due to that.

Files with STDs will be much larger. Initially only few ACs will do STDs however, therefore there is no immediate concern.

9. References and CVs

The E-GVAP-4 team will consist of Henrik Vedel (DMI), Siebren de Haan (KNMI), Jonathan Jones and Owen Lewis (UK Met Office). Currently they constitute the E-GVAP-III team. The former 3 have been in the E-GVAP team since the start of E-GVAP, and in research projects leading to E-GVAP prior to that. Owen Lewis joined the E-GVAP team in 2015.

CVs found on the next 4 pages.

Curriculum vitae – Henrik Vedel Born 1958, Danish

Education

PhD in physics from Niels Bohr Institute, University of Copenhagen, 1991

Cand scient (approx masters) in physics and mathematics from University of Copenhagen, 1987

Employment record

1998 – present Research and development division, Danish Meteorological Institute, currently as senior scientist.

Previously working in the field of theoretical astrophysics

1994 – 1997 Postdoc at Theoretical Astrophysics Centre, Copenhagen.

1993 – 1994 Research assistant at Department of Physics and Mathematics, Univ. of Victoria, Canada.

1992 Postdoc stipend from Danish Res. Council. Department of Physics and Mathematics, Univ. of Victoria, Canada

1990 – 1991 Guest researcher at NORDITA, Copenhagen

1987 – 1990 PhD stipend from SARC Foundation. 1986 – 1987 Carlsberg student scholarship.

Research interests in Geophysics

Data assimilation methods in numerical weather prediction (NWP). Use of new observations in NWP, in particular GNSS/GPS observations and weather radar data in NWP. Now-casting. Statistics. Ensemble prediction. Validation and verification of NWP forecasts. Climate monitoring and climate change.

Relevant project and project leader experience

- Programme manager of international project E-GVAP (EIG EUMETNET GNSS Water Vapour Programme, http://egvap.dmi.dk) (18 national met office partners + 21 GNSS data processing centers, 2005-2009, 2009-2012, now phase III, 2013-2018).
- Coordinator of EU research project TOUGH (Targeting Optimal Use of GPS Humidity Measurements in Meteorology, http://tough.dmi.dk, http://tough.dmi.dk/deliverables/d14-final-rep.pdf) (15 partners, 13 countries, 2003-2006).
- Danish representative in EU Cost Action GNSS4SWEC, on next generation ground-based GNSS meteorology.
- Co-convenor of annual EGU session on "Atmospheric Remote Sensing with Space Geodetic Techniques".
- PI in several international and national projects.
- Experience in supervision of bachelor, master and PhD students, training of postdocs.

Selected reviewed publications in geophysics

- Guerova, G, J. Jones, J. Dousa, G. Dick, S. de Haan, E. Pottiaux, O. Bock, R. Pacione, G. Elgered, H. Vedel, and M. Bender, *Review of the state of the art and future prospects of the ground-based GNSS meteorology in Europe,* Atmos. Meas. Tech., 9, 5385-5406, 2016.
- Olsen, B. T., U. S. Korsholm, C. Petersen, N. W. Nielsen, B. H. Sass, and H. Vedel, *On the performance of the new NWP nowcasting system at the Danish Meteorological Institute during a heavy rain period.* Meteorol. Atmos. Phys., DOI 10.1007/s00703-015-0388-7, 2015
- Korsholm, U. S., C. Petersen, B. H. Sass, N.W. Nielsen, D. G. Jensen, B. T. Olsen, R. Gill and Jensen, and H. Vedel. *A new approach for assimilation of 2D radar precipitation in a high-resolution NWP model,* Meteorol. Appl., 2014*, DOI 10.1002/met.1466*
- Pacione, R., B. Pace, H. Vedel, S. de Haan, R. Lanotte, F. Vespe, *Combination methods of Tropospheric Time Series",* 2010, Advances in Space Research, Galileo Special Issue, DOI:10.1016/j.asr.2010.07.021
- Jaervinen, H., R. Eresmaa, H. Vedel, K. Salonen, S. Niemela, and J. de Vries, *A variational data assimilation system for ground-based GPS slant delays, 2007,* Quart. Jour. Roy. Met. Soc., vol 133, p. 969
- Vedel, H. and X.Y. Huang, *Impact of Ground Based GPS Data on Numerical Weather Prediction,* Jour. Met. Soc. Jap, 2004, **82**, 459
- Pugnahi, S., M. Boccolari, S. Fazlagic, R. Pacione, R. Santangelo, H. Vedel, F. Vespe, *Comparison of independent integrated water vapour estimates from GPS and sun photometer measurements and a meteorological model,* Phys. Chem. Earcth, 27, 355-362, 2002.
- Vedel, H, K.S. Mogensen, X.-Y. Huang, *Calculation of Zenith Delays from Meteorological Data. Comparison of NWP model, Radiosonde and GPS delays,* Phys. Chem. Earth, 26, 497-502, 2001.

Curriculum vitae – Jonathan Jones

Education

Ph.D., Nottingham Geospatial Institute, June 2010, University of Nottingham Thesis: 'An Assessment of the quality of GPS Water Vapour Estimates and their use in Operational Meteorology and Climate Monitoring' Supervisors: Dr Richard M. Bingley and Dr John Nash

B.Sc. Environmental Geoscience, June 1996, Cardiff University

Professional Experience

- 2010–present, Senior Scientist, Obs. R&D, Met Office, Exeter
- 2008–2010, Scientist, Obs. R&D, Met Office, Exeter
- 2005–2008, Instrument Scientist, Obs. R&D, Met Office, Exeter
- 2002–2005, Research Scientist, Obs. R&D, Met Office, Bracknell

Scientific Community/Working Groups

- Chair, COST Action ES1206 - Advanced Global Navigation Satellite Systems tropospheric products for monitoring Severe Weather Events and Climate
- Chair, EUMETNET E-GVAP Expert Team on Data Processing and Standards
- Member, IGS Tropospheric Working Group
- Member, GRUAN GNSS-PWV Task Team
- Member, IAG Working Group 4.3.3 – 'Integration of GNSS atmospheric models with NWP'
- Member, IAG Working Group 4.3.7 – 'Real-time GNSS Tropospheric Products'
- Member, European Plate Observing System (EPOS) WG4
- WP2 Member, Gap Analysis for Integrated Atmospheric ECV CLImate Monitoring (GAIA-CLIM) Horizon 2020 Project
- Invited Expert, Portuguese NUEVM Project

Ongoing Professional Activities

- *Associate Editor for AMT/ACP/ANGEO inter-journal Special Issue 'Advanced Global Navigation Satellite Systems tropospheric products for monitoring severe weather events and climate'*
- Fellow, Royal Meteorological Society
- *Co-Convener on annual AGU Session on 'Meteorological observations from ground and space-based Global Navigation Satellite Systems (GNSS)'*
- Co-convener of annual EMS session on 'Meteorological Observations from ground and space-based Global Navigation Satellite System (GNSS)'

<u>Selected peer-reviewed Journal Articles</u>

Bennitt, G. V., H.R. Johnson, P. P. Weston and **J. Jones,** (2017) An Assessment of ZTD observation errors and their correlations using the Met Office UKV Model, Quarterly Journal of the Royal Meteorological Society

E. Priego, **J. Jones**, M.J. Porres & A. Seco (2016): Monitoring water vapour with GNSS during a heavy rainfall event in the Spanish Mediterranean area, Geomatics, Natural Hazards and Risk, DOI: 10.1080/19475705.2016.1201150

Guerova, G., **J. Jones**, J. Dousa, G. Dick, S. de Haan, E. Pottiaux, O. Bock, R. Pacione, G. Elgered, H. Vedel, and M. Bender, Review of the state-of-the-art and future prospects of the ground-based GNSS meteorology in Europe, Atmos. Meas. Tech. Discuss., doi:10.5194/amt-2016-125.

Priego, E., A. Seco, **J. Jones** and M. Porres: Heavy rain analysis based on GNSS water vapour content in the Spanish Mediterranean area, Meteorological Applications, DOI: 10.1002/met.1586

Gaffard, C., J. Nash, E. Walker, T. J. Hewison, **J. Jones**, and E. G. Norton, 2008: High time resolution boundary layer description using combined remote sensing instruments, Ann. Geophys., 26, 2597-2612

Curriculum Vitae Owen Ronald Lewis

Met Office, Fitzroy Road, Exeter EX1 3PB, United Kingdom
Email: owen.lewis@metoffice.gov.uk
Date of Birth- 13th October 1991

Education

Msc Applied Meteorology: University of Reading, UK, October 2013 – August 2014.
BSc (Hons) Physics: Durham University, UK, October 2010-June 2013

Professional experience

Satellite Applications Scientist, Met Office, April 2015 - present
Post Graduate Research Assistant University of Reading, September 2014 – April 2015
Met Office Summer Placement July – September 2013

I currently work at the Met Office in the UK as a Satellite Applications Scientist. In this role I maintain and do research into the use of satellite observations for numerical weather prediction (NWP). My work is mainly focused on the assimilation of Ground Based GNSS but recently has expanded to include Radio Occultation as well.
I am responsible for monitoring all incoming Ground GPS observations for quality and then ensuring that the systems that then convert these to BUFR for dissemination on the Global Telecommunications System (GTS) are working. This includes the ftp-server used by E-GVAP for COST file distribution and the database of Ground based GNSS stations. If there are outages from certain suppliers I communicate with them to find out the cause of the outage and when data may resume. I also monitor the output from the NWP to ensure that the observations are having the desired effect upon the models and are not causing any detrimental impacts with their assimilation. The research work I do is focused on how to improve the NWP using GNSS satellite observations, which can involve working on the data assimilation scheme or the observation pre-processing system (observation errors, thinning).
Recently I have been involved in producing a set of software tools for encoding E-GVAP 'COST- format' files to WMO-standard BUFR for dissemination to NWP users over the GTS and preconversion tools to convert other formats to COST. The software once complete will be released by ROM-SAF.

On completion of my Masters degree I was offered a position as a post graduate research assistant by my dissertation supervisor. I worked on a method attempting to remove the effect of attenuation upon a 94 GHz radar and therefore estimate reflectivity values near to cloud top.

For my Masters at the University of Reading I had to complete a dissertation. The title of this was Evaluating Radar Rainfall Rate from a Satellite using a Drop Counting Raingauge. The aim was to validate a method of rainfall rate retrieval from a satellite by using a ground based radar and a drop counting raingauge. I used python to analyse data from two radars at Chilbolton, a 35 GHz and a 3 GHz, as well as several raingauges. The work was not very conclusive to demonstrating the retrieval method due to an artefact in the radar signal but there was evidence for that wetting of the 35 GHz radar introduces further attenuation to the signal.

Curiculum vitae Siebren de Haan

Dr. Siebren de Haan is a senior researcher at the Research and Development Observations and Data Technology department within the KNMI. He worked for two years on the assimilation of satellite derived sea surface temperatures for use in numerical weather prediction models and on an ice detection algorithm using backscatter data from the ERS satellites within the EUMETSAT Ocean and Sea Ice Satellite Application Facility. He is currently responsible member in the EUMETNET GPS Water Vapour Programme (E-GVAP I-III), actively involved in the EUMETNET ASIST programme, member of the WMO CIMO Expert Team on New Technologies and Test Beds and WMO CIMO Task Team on Aircraft-based Observations. Very recent activities are related to novel wind and temperature observations from commercial aircraft exploiting Mode-S Enhanced Surveillance information. Siebren has a degree in mathematics. He got his PhD in meteorology in May 2008 from the University of Wageningen.

10. Authority to submit

For DMI: Marianne Thyrring, Director General

For UK Met Office: Sandra Pearson, Head of Legal contracts

For KNMI:

Annex 1. Acronyms

AC	Analysis center (doing ZTD, possibly gradient and STD, estimation using GNSS data).
AQC	Active quality control (detection of AC problems by inter comparsion of ZTDs from several ACs.)
BeiDou	The Chinese GNSS system (under gradual implementation).
DA	Data assimilation
EUREF	EUROPEAN TERRESTRIAL REFERENCE SYSTEM 89. (European geodetic collaboration, somewhat like EUMETNET. Responsible for maintaining the European component of the global geodetic reference system.)
Galileo	The European GNSS system (under gradual implementation).
GLONASS	The Russian (former Soviet) GNSS system
GNSS	Global navigation satellite system, generic term.
GNSS4SWEC	Advanced Global Navigation Satellite System tropospheric products for monitoring servere weather events and climate. EU COST Action ES1206
GPS	The US GNSS system.
IWV	Integrated water vapour.
NRT	Near real-time.
OmB	Observation minus background (GNSS ZTD estimate minus NWP ZTD)
PPP	Precise point positioning, as opposed to standard “network solution”.
STD	Slant total delay (by some called slant tropospheric delay)
ZTD	Zenith total delay (by some called zenith tropospheric delay)
ZTD gradients	North-South and East-West gradients of ZTD.
ZWD	Zenith wet delay.

Annex 2: Short description of the current E-GVAP partner setups

DMI contribution to E-GVAP

DMI work in support of E-GVAP

- Standard programme management as requested by EUMETNET.
- Managing and hosting the base E-GVAP homepage. The E-GVAP homepage, http://egvap.dmi.dk, provides the entry point to all E-GVAP information, documents and monitoring and validation system. The homepage is setup and maintained at DMI and located on a server at DMI, whereas the monitoring and validation web interface is setup and maintained at KNMI, and runs on a server located at KNMI.
- Liaison with geodetic society and institutions. Regular contacts, both in the form of meetings and mail, with GNSS geodesists at European geodetic institutions is vital to the running of E-GVAP. Both regarding the current network and ACs, and in order to expand the network and to improve quality.
- Liaison with non European met-services and geodetic institutions to obtain non European GNSS delay data. This in order to obtain GNSS data for members running global NWP models, and in order to agree on a common data format for ground based GNSS data in meteorology.
- Leading the expert team on GNSS data usage.
- Development and setup of active quality control (AQC) of GNSS delay data. The AQC being developed and set up at DMI is based on inter comparison of ZTDs from sites processed by at least 4 ACs during the last hour. In the setup phase the ZTD data are downloaded from UKMO, the statistics generated and evaluated at DMI, and the flagging files subsequently uploaded to the UKMO ftp-server. At a later stage it should be moved to the same server as the data, to increase robustness. The statistical treatment, evaluation and flagging file construction, is based on a mixture of Fortran and Perl programmes.
- Quality assessment of GNSS ZTDs for EUCOS QMP. Statistical properties for all sites and AC combos are derived from O-Bs estimated at UKMO (which is running a global model) are delivered to EUCOS QMP daily. The UKMO O-Bs are downloaded from UKMO 4 times a day, and the statistics done at DMI, and uploaded to DWD (EUCOS) and the ftp-server at UKMO.
- Provision of meteorological data to geodetic partners. The part of radiosonde reports necessary for computation of ZTD are extracted daily, and provided via the ftp-server at UKMO, in a non meteorological format readable by geodesists. The extractions cover the European + North Atlantic region. Upon requests parts of NWP fields are provided to geodesists. Help is provided to geodesists wanting to determine ZTD, ZHD and ZWD from meteorological data. This type of data exchange can be expected to increase, since research in better and/or quicker removal of the atmospheric noise terms (such as the ZTD) is important to some of the ACs basic work. http://egvap.dmi.dk/support/formats/rs-dataspec-doc.txt describes the format of the extracted radiosonde data.
- Following and aiding progress in research in “next generation” ground-based GNSS meteorology.

Work related to E-GVAP, but funded by DMI and/or other projects

- Assimilation of GNSS ZTD data in DMI NWP system, including determination of O-Bs for all operational E-GVAP data within the DMI model.
- Development and running of dedicated statistical software for selection of GNSS sites to assimilate actively. By estimation of the O-B distributions for each GNSS site and AC combo, the software identifies site&AC combos which fulfil the statistical requirements for usage in variational data assimilation systems, and derives bias correction and observation error estimates for use in active data assimilation. The information is used as a white list when assimilating actively GNSS data. Will be made available to partners in the “Harmonie” collaboration (including the models HIRLAM, Aladin, and Arome).
- Involved in the formulation (and review) of proposals on research in GNSS meteorology, to the EU, national and international research councils. This aids the research on “next generation GNSS meteorology” and provide for part of the liaison work, that would otherwise cost extra E-GVAP travels. Henrik Vedel is co-convenor of the EGU general assembly session on ground based GNSS meteorology.
- Worked since 1998 in the field of assimilation and validation of ground-based GNSS data in scientific projects on ground-based GNSS meteorology, including former projects MAGIC, TOUGH (led by H. Vedel, DMI), and COST Action 716.

KNMI contribution to E-GVAP

Overview

KNMI work in support of E-GVAP (and prior projects TOUGH and COST-716) is in several areas:

1. Provision *of central validation and visualization facility* for GNSS data processed by all processing centres delivering data to the Met Office data hub
2. Conversion of all GNSS ZTD to IWV using the KNMI observation data base and delivering IWV data to the Met Office data hub
3. Monitoring by comparison with NWP (HIRLAM) and calculating statistics (7days, displayed on the web-site)
4. Hosting the live data from GNSS data and products created at the Met Office
    a. GNSS ZTD and IWV time series (with HIRLAM), created at KNMI
    b. IWV maps created by Met Office
    c. Latency and availability plots created by the Met Office
    d. Ingestion in the plots of Met Office Global NWP data for some sites
5. Monitoring the GNSS-GTS bufr observations arriving at KNMI

Work related to E-GVAP (funded by KNMI or other projects)

1. Processing GNSS data at KNMI
    a. Dutch GNSS sites for assimilation in near real time (latency 30 minutes)
    b. Dutch (and a few NTRIP) GNSS sites in real time (latency 5 minutes)
2. Assimilation of GNSS data for numerical nowcasting (Hourly Update Cycle)

Additional details

E-GVAP monitoring portal

Figure 1 shows the portal of E-GVAP with all sites colour coded by observation latency. A clickable map is generated for easy access to the time series. IWV maps created by the Met Office are presented in the "products" section.

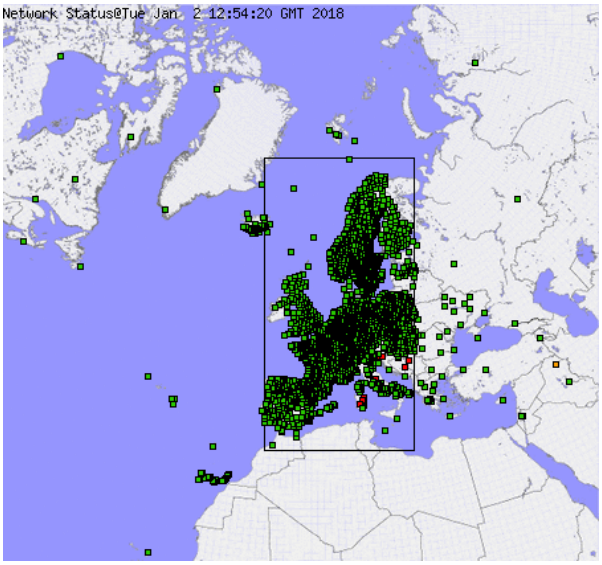

Figure 1: European network of GNSS data

IWV conversion and data flow

The data delivered to the Met Office data ftp-server is collected and converted into IWV using pressure and temperature extracted from the KNMI operational observation data base. A data set is then prepared for the Met Office for IWV map creation.

Figure 2 shows schematically the data flow of the validation and monitoring website. GNSS observations delivered to the data hub are downloaded every 2 minutes and converted into IWV. GNSS data received through the GTS is monitored every hour.

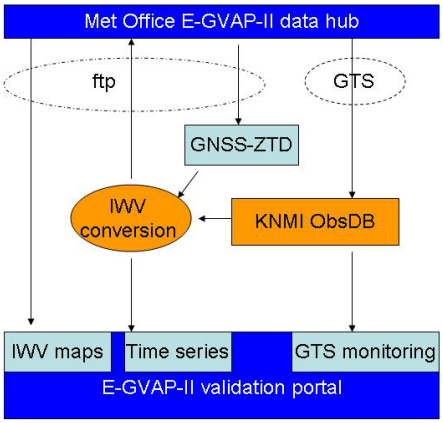

Figure 2: schematic data flow for the validation portal and IWV maps.

KNMI Processing Centre

KNMI runs two processing schemes; one hourly product, latency of 30 minutes, and one sub-hourly product with latency 5 minutes.Both processing schemes have been implemented on a high availability server with fallback functionalities.

Met Office contribution to E-GVAP

Overview

- Provision of a central data collection hub and Internet access to observational data and supporting files to project members and other authorised users; archiving and housekeeping tasks
- Live conversion of near-real time (NRT) incoming files to BUFR format for onward-dissemination to operational NWP centres via the GTS
- Monitoring of NRT data in terms of: 1) Dataflow (availability, latency, notification of missing files, etc.) 2) Quality (derivation of NWP ZTD for comparison to GNSS ZTD).
- Lead and contributing authors to project documentation (principally related to file formats, user requirements, etc).
- Products such as derived IWV and development and maintenance of a software package mainly supporting file interfaces
- Operational generation of NRT data from (mostly) UK GNSS sites as AC 'METO' and from a global network of sites ('METG') and also a UK-specific rapid system ('METR') which is currently under test. All products from these systems are available to project members for evaluation.
- Processing of other countries' raw GNSS data in the situation where they don't have the capability to process data themselves

Figure 3 shows the data collection, processing, dissemination and monitoring systems for E-GVAP data (with firewalls etc. omitted).

Additional details

Data collection

NRT data in compressed COST-format files are uploaded via FTP by Analysis Centres associated with E-GVAP to a central Met Office 'hub' server FTPWEB. This server is in fact a fully-redundant set of physical machines in separate computer halls, having cross-mounted file systems, thus highly resilient with 24/7 availability. E-GVAP has a private account on this server; each data provider has their own virtual account tied to the project.
NRT data arriving on *FTPWEB* is pushed directly to a second, Internet-facing FTP server *FTPPUBLIC*, from where authorised users can download the NRT (and other) files, and to which non-NRT files can be uploaded for sharing within the project. As for *FTPWEB*, each user (institute) has their own virtual login associated with the

main project account. Guest accounts can be provided for authorised non-E-GVAP research institutes for short- or long-term read-only access.

FTPWEB also pushes incoming files to a dedicated account *gbgnssman* for further processing and dissemination. Under gbgnssman the required scripts are run on a SLURM/SPICE cluster of linux servers. The original COST-format data are archived and various housekeeping tasks performed, such as maintaining meta-data on the GNSS sites (including provision of daily-updated site lists to EUCOS for their monitoring hosted at DWD and daily updated stations maps, purging older files from *FTPPUBLIC*, and other low-level, but necessary tasks).

The *FTPPUBLIC* server also provides a rolling archive of consolidated monthly COST-format data, recent synoptic, radiosonde and model data, regularly updated statistics, plots, meta-data, supporting documentation, software, etc.

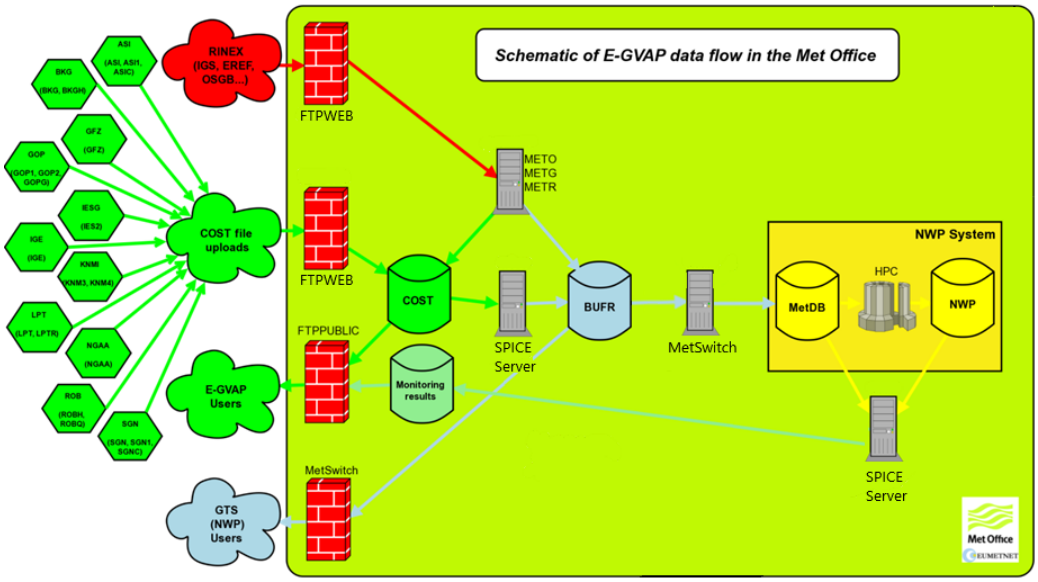

Figure 3. E-GVAP data collection, dissemination and monitoring system hosted by the Met Office.

Dissemination

A poll for new incoming COST-format files is done every 5 minutes, and new data encoded into WMO-approved BUFR. The BUFR files are uploaded to the Met Office's GTS message switching system, MetSwitch, for dissemination to operational NWP centres that have requested the service.

The upload and dissemination system provides a parallel set of directories which can be used to upload test data; the only difference from the regular NRT data is that test data is not disseminated over the GTS. There is also a mechanism to generate test routing headers to disseminate bulletins over the GTS to a limited set of recipients (e.g. only to Météo-France) for a period, enabling end-user testing via GTS before becoming fully operational. The NRT and test BUFR files are also passed to the Met Office's operational synoptic database, the MetDB, which is the sole interface for getting observational data into the NWP model assimilation system and the source for the monitoring tasks at Met Office.

AC monitoring

Every 3 hours *FTPPUBLIC* is scanned for the presence of COST-format files from each analysis centre, and e-mail warnings are sent out to the individual analysis centres and users of E-GVAP data if no files have been uploaded in the previous 6 hours. Requirements are being gathered to extend this service in the future to trigger on other tests such as a low number of sites or observations.

Monitoring

Monitoring is split into two types: dataflow and quality. Both types use the MetDB as the observational data source; for quality monitoring, the Met Office's NWP model background fields are also extracted for each model run and the 3-D fields interpolated to the GNSS station locations.
Various metrics on the E-GVAP data in the MetDB are analysed on a daily basis. These include the number of observations per AC per hour of the day over a rolling 28-day period, and the delay or latency — defined as the time difference between the ZTD observation timestamp and time of arrival in the MetDB. These plots are uploaded to *FTPPUBLIC* and collected by KNMI for public display on the E-GVAP monitoring website (http://egvap.dmi.dk → Validation → Latency). These metrics are also generated monthly for the previous calendar month.

OmB derivation

NWP model-derived values of ZTD are calculated 4 times a day for every ZTD observation received. These are used to statistically compare the ZTD observations and generate bias and standard deviations for each analysis centre and GNSS site. The model-derived ZTDs are placed on *FTPPUBLIC* and are used by KNMI and DMI to generate statistics and plots for the E-GVAP monitoring website and the EUCOS Quality Monitoring Portal, and also used to estimate when "test" uploads can be considered of operational quality and moved to the GTS data stream. This is often useful when analysis centres are new, or are testing a new processing strategy. XXXXX

Products

The Met Office provides a number of derived products, e.g. IWV maps which combine the E-GVAP ZTD solutions converted to IWV using nearby synoptic pressure and temperature observations, plus wind and lightning information taken from the Met Office database. The Ground-Based GNSS Package GBGP is provided by EUMETSAT's Radio Occultation Meteorology Satellite Application Facility (ROM SAF) and was developed at the Met Office. The GBGP package is heavily based on the Met Office's GWVBUFR package originally developed for the EUMETNET E-GVAP project, but with a build system, testing, formal release and user support. It comprises software (as source code) and supporting build and test scripts, data files and documentation to assist data suppliers to convert native file formats to the COST-format and COST-format files to WMO BUFR for dissemination via the GTS. The tools include comprehensive data checking, optionally enhanced with checks against a dynamic meta-data database.

11. Analysis Centre

At the UK Met Office there are fifteen virtual Linux servers dedicated to the processing of GNSS data, all employing the Bernese v5.0 GNSS processing software in Double-Difference mode. These servers provide 5 GNSS 'services' processing different domains and processing raw GNSS data in different ways to provide different products. The services are;

i. METO (European domain, hourly tropospheric processing)
ii. METG (Global domain, hourly tropospheric processing)
iii. METR (UK-specific domain, sub-hourly 15-minute tropospheric processing).

There are additionally two space weather processing services, METI01 and METI02:

iv. METI01 (Global domain, hourly ionospheric processing)
v. METI02 (Global domain, sub-hourly 15-minute ionospheric processing)

For each of these five 'services' there are three levels of server; an operational (PRD) server, a test (TST) server and a development (DEV) server.

The METO and METG services are fully operational, meaning the data streams to the Met Office database and to E-GVAP come from the PRD servers supported by the Met Office operational support department, TIS. The METR service is still supported by Observations R&D, however it is the aim that in 2018, the support of the METR service too will be migrated to TIS. Additionally, work has already begun on migrating all servers to the Bernese v5.2 processing software, which will hopefully be complete in 2018.

All servers run the same BUFR compilation software to convert the in-house COST-format files to BUFR and to upload to *FTPPUBLIC*, the MetDB and the GTS (currently only METO goes out on the GTS) for dissemination.

In addition, a backup system is running at the University of Nottingham (IESSG – AC 'IES2') for development and as a check on the operational output.

The Met Office process raw GNSS data on behalf of some countries who do not have the facility to process data themselves. In 2006 a 3-party Memorandum of Understanding was established between the Ordnance Survey of Ireland, Met Eireann and the UK Met Office, whereby the UK Met Office (acting on behalf of E-GVAP), would process raw GNSS data provided my OSi and make the products (ZTD and IWV) available to E-GVAP member Met Eireann for operational NWP assimilation or forecaster use. This service has been ongoing since and the Met Office is in the process of updating the system to provide Met Eireann with sub-hourly rather than hourly ZTD/IWV products.

Similar, albeit less formal, arrangements (i.e. no MoU) are in place where the Met Office (again, acting on behalf of E-GVAP) processes data on behalf of the Icelandic and soon to be, Canadian Met Services.

EUMETNET
EUROPEAN METEOROLOGICAL SERVICES NETWORK

ANNEX 3 to the E-GVAP PROGRAMME DECISION

To be included when applicable:

E-GVAP input (pre-existing – background – intellectual Property)

E-GVAP output (foreground – acquired - intellectual Property)

E-GVAP Data Policy

To be included as soon as the development of the Programme makes it possible to define the elements and no later than 31st March 2019.